S.C. PETROTEL–LUKOIL S.A.
PLOIESTI

APROBAT,
MEMBRU AL DIRECTORATULUI/ ING. SEF

21.08.2017

# TEMA TEHNICA DE PROIECTARE

## 1. DATE GENERALE:

1.1. Denumirea lucrarii: Inlocuire elemente conducta SIS 24-N-06-PGH-016,030,072-300,

1.2. Instalatia (serviciul) beneficiara: Aria de Productie – Sector 1
1.3. Amplasament: Instalatia HPM

1.4. Documente si documentatii de referinta:, P&ID HPM.

## 2. NECESITATE SI OPORTUNITATE:

Conducta **SIS 24-N-06-PGH-016,030,072-300** , dupa expertizare in urma masuratorilor de grosimi efectuate de firma TUV, i s-au acordat 4 ani la verificarea din 2016 si scoaterea din functiune din cauza valorilor mici de grosimi sub limita de functionare in conditii de siguranta. – conform Raport inspectie nr 432/30.06.2017

## 3. PRINCIPALELE CERINTE:

3.1. Elaborare proiect de inlocuit elemente conducta. – conform Raport inspectie nr 432/30.06.2017

3.2. Prezentarea specificatiilor tehnice conductei care trebuie inlocuite.

## 4. DESCRIEREA SOLUTIEI PROPUSE:

4.1. Tehnologie: Realizarea unui proiect de montaj pentru inlocuit elemente conducta – conform Raport inspectie nr 432/30.06.2017
4.2. Descrierea solutiei propuse pe categorii de lucrari:
(In cazul in care sunt necesare descrieri mai ample – schite privind amplasarea, scheme tehnologica etc – este obligatorie anexarea acestora la tema)

Se va executa si inlocui conducta in baza unui proiect executat de firma reparatoare si avizat de beneficiar in conformitate cu schema izometrica si fisa tehnica anexata.

| Nr. crt. | Categorii de lucrari | Descriere sumara | Documente existente | Observatii |
|---|---|---|---|---|
| 1 | Tehnologii | NU | | |
| 2 | Utilaje | NU | | |
| 3 | Montaj utilaj si leg. conducte | DA | | |
| 4 | Constructii beton | NU | | |
| 5 | Constructii metalice | NU | | |
| 6 | Instalatii apa-canal | NU | | |
| 7 | Instalatii electrice 2) | NU | | |
| 8 | Instalatii AMC 1) | NU | | |
| 9 | Utilitati (aer, azot, apa etc) | NU | | |
| 10 | Instalatii de incalzire | NU | | |
| 11 | Instalatii de ventilatie | NU | | |
| 12 | Mecanizare ex:grinda monorai | NU | | |
| 13 | Alte facilitati | NU | | |
| 14 | Devize | DA | | |

1) Reglari, inregistrari, semnalizari, blocari
2) Surse de putere, blocari, iluminat, avertizare P.S.I. si paza, explozimetre, telefonie, legaturi echipotentiale etc.

4.3. Dotari:_____

4.4.Deseuri, noxe si masuri de protectie a mediului: Conform normelor in vigoare pentru instalatia HPM

4.5. Factori de risc si propuneri de masuri de tehnica securitii muncii: Nu se modifica.

---

## 4. SURSA DE FINANTARE:

## 5. RESPONSABIL DIN PARTEA BENEFICIARULUI:

- Numele si prenumele: Manea Emilian
- Functia: Inginer tehnolog sector 1
- Telefon: _____

- Termen executie proiect: 01.09.2017

**7. AVIZARE**:

| FUNCTIA | NUMELE SI PRENUMELE | SEMNATURA |
|---|---|---|
| DIR. GEN. ADJ. REPARATII SI MENTENANTA UTILAJE | Y. I. EROGOV | |
| TEHNOLOG SEF | CATALIN NICULESCU | 17 24.08.17 |
| ING. SEF ADJ. PRODUCTIE | PARNAU DANIEL | 17.08.17. |
| ING. SEF MECANIC | DENYS MAKUSHEV | |
| ING. SEF METROLOG | ION ENE | |
| ING.SEF ENERGETICIAN | MAXIM GRECOV | 23.08.2017 |
| SEF ARIE | GHEORGHE COMAN | 16.08.17 |

SEF SIT. Alexandru Valentin 24.08.2017

**Intocmit :**

**Sef inst**

**Onciu Valentin / 3343**

Anexa A

**Date initiale pentru partea Tehnololgica**

Utilaje statice si dinamice.

| | | |
|---|---|---|
| 1. | Utilajele care vor fi implicate in proiect | Nu sunt |
| 2. | Parametrii de lucru ai utilajelor | Nu este cazul |
| 3. | Inlocuirea utilajelor | Nu |
| 4. | Utilajele care necesita inlocuire | Nu se vor inlocui utilaje |
| 5. | Se vor modifica parametrii de lucru ai utilajelor | Nu |
| 6. | Parametrii de lucru ai utilajelor noi | NU |
| 7. | Utilaje suplimentare/noi | Nu |
| 8. | Parametrii de lucru ai utilajelor suplimentare/noi | Nu este cazul |
| 9. | Echipamente AMC pe utilajele existente | Nu sunt necesare |
| 10. | Echipamente AMC noi pe utilajele existente | NU |
| 11. | Racorduri noi pentru echipamente AMC | Nu |
| 12. | Parametrii de blocare si alarmare pentru fiecare utilaj in parte | Nu este cazul |
| 13. | Caracteristicile sistemelor de siguranta existente. | Nu sunt necesare |
| 14. | Necesitatea calculului componentelor interioare ale utilajului | Nu este cazul |
| 15. | Necesitatea inlocuirii componentelor interioare existente | Nu este cazul |
| 16. | Utilajele pentru care este necesara refacerea calculului si inlocuirea componentelor interioare. | Nu este cazul |
| 17. | Locul amplasarii utilajelor suplimentare/noi | Nu este cazul |

Legaturi Conducte

| | | |
|---|---|---|
| 1. | Necesitatea montajului conductelor noi | Da |
| 2. | Locul conexiunilor conductelor noi | Instalatia HPM/ conform schemei din Tema tehnica |
| 3. | Parametrii de lucru ai conductelor existente care fac interconexiune cu cele noi | Pres=75bar<br>Temp=50 °C |
| 4. | Parametrii de lucru ai conductelor noi | NU |
| 5. | Necesitatea inlocuirii conductelor existente. | Uzura cele existente |
| 6. | Specificatiile conductelor care se inlocuiesc | Nu este cazul |
| 7. | Limitele inlocuirii conductelor | Nu este cazul |
| 8. | Amplasarea conductelor | Instalatia HPM |
| 9. | Traseul conductei | conform schemei din Tema tehnica |
| 10. | Existenta spatiului liber pe estacada necasar amplasarii conductei | NU |
| 11. | Necesitatea constructiei estacadelor noi | Nu este cazul |

| | |
|---|---|
| | Lista documentatiei obligatorii pentru partea de Tehnologie |
| | |
| | - desenele ale utilajelor existente |

| | |
|---|---|
| | - cartile tehnice ale utilajelor existente |
| | - plan amplasare a utilajelor . |
| | - plan zonare. |

Toate campurile evidentiate cu rosu sunt obligatorii.

RESPONSABIL DIN PARTEA BENEFICIARULUI:

| FUNCTIA | NUMELE SI PRENUMELE | SEMNATURA |
|---|---|---|
| ING. TEHNOLOG SECTOR 1 PRODUCTIE | MANEA EMILIAN | |
| SEF INSTALATIE DAV3-HPM-Fci H2 | ONCIU VALENTIN | |

Anexa C

**Date initiale pentru partea Automatizari.**

| | | |
|---|---|---|
| 1. | Tipul echipamentelor AMC in conformitate cu cerintele tehnologice | Conform Anexei |
| 2. | Necesitatea efectuarii calculelor de verificare a echipamentelor AMC | Nu |
| 3. | Necesitatea inlocuirii echipamentelor | Se vor cuprinde demontarea ,remontarea si punerea in functiune a echipamentelor existente pe aceste conducte ,iar in cazul schimbarii de clase ,racorduri acestea trebuiesc sa fie cuprinse in proiect . |
| 4. | Necesitatea si tipul incalzirii echipamentelor AMC | In functie de cele existente |
| 5. | Propunerea schemei logice al alarmelor si blocarilor | Nu este necesara |
| 6. | Necesitatea extinderii DCS | Nu |
| 7. | Modalitatea amplasare cabluri AMC | Conform existent |
| 8. | Necesitatea extinderii SCADA | Nu este cazul |
| 9. | Modalitatea amplasare cabluri SCADA | Nu este cazul |
| 10. | Producator SCADA | Nu este cazul |
| | | |
| | Lista documentatiei obligatorii pentru partea de AMC si Automatizari | |
| | Specificatii tehnice regulator de temperature diferentiala | |
| | | |

Toate campurile evidentiate cu rosu sunt obligatorii.

RESPONSABIL DIN PARTEA BENEFICIARULUI:

| FUNCTIA | NUMELE SI PRENUMELE | SEMNATURA |
|---|---|---|
| ING. SEF METROLOG | ION ENE | |
| ING. TEHNOLOG SECTOR 1 PRODUCTIE | MANEA EMILIAN | |
| SEF INSTALATIE DAV3-HPM- F-ci H2 | ONCIU VALENTIN | |

S.C.PETROTEL-LUKOIL S.A.
BIROU INSPECTIE ECHIPAMENTE - FIABILITATE

APROBAT,
INSPECTOR SEF - SEF BIE - FIABILITATE
ALEXANDRU VALENTIN

# RAPORT DE INSPECTIE

Nr : 432 Data : 30.06.2017

**1. INSTALATIA : HPM**
**2. ECHIPAMENT : SIS 24 – N – 06 – PGH – 16, 30, 72 – 300**
**3. PARAMETRI :**

| Parametrii conform proiect / livret utilaj | Parametri reali de exploatare conform DCS |
|---|---|
| P = 75 bar ; | Fluid = motorina, gaze cu H2S |
| T = 50 $^0$C ; | Material : SA 106Gr.A + SA234WPB |

**4. DEFECTIUNI CONSTATATE :**
4.1. Sistemul de conducte **SIS 24 – N – 06 – PGH – 16, 30, 72 – 300**, de la 06-V4, SIS 25 la 06-K2, 06-NK3, a fost expertizata in anul 2016. Aceasta in urma verificarilor tehnice a primit durata de viata remanenta de 4 ani. Anul fabricatiei : 1975. Firma expertizatoare TUV. Conducta este autorizata cu nr. ISCIR BV CDT 104187

**5. CAUZE POSIBILE :** uzura normala

**6. REMEDIERE DEFECTIUNI :**
6.1. Se vor inlocui in OT 2019 in baza unei documentatii tehnice preliminare intocmite de firma reparatoare conform prescriptiei tehnice aplicabile urmatoarele elemente de conducta : A72-73, A64-65-66-67-68-69-70-71, A82-83-84-85, C17, T1, A88-89. Grosimea elementelor de conducta vor fi stabilite de proiectant dupa analizarea documentatiei tehnice.
6.2. Controalele NDT vor fi realizate de firma executanta cu personal autorizat.
6.3. Proba de presiune se va realiza in prezenta inspectorului CNCIR si a reprezentantului SIE la 107.5bar.

**7. TERMEN DE REALIZARE** : OT 2019

**8. RECOMANDARI SUPLIMENTARE** : N/A

**9. DOCUMENTE ANEXATE :**
9.1. Schema izometrica informativa
9.2. Breviar de calcul

**10. INTOCMIT : RSVTI**
N.P. : CRISTIAN MIREL
SEMNATURA .....

**11. AVIZAT : ING. SEF MECANIC**
N.P. : MAKUSHEV DENYS
SEMNATURA .....

N

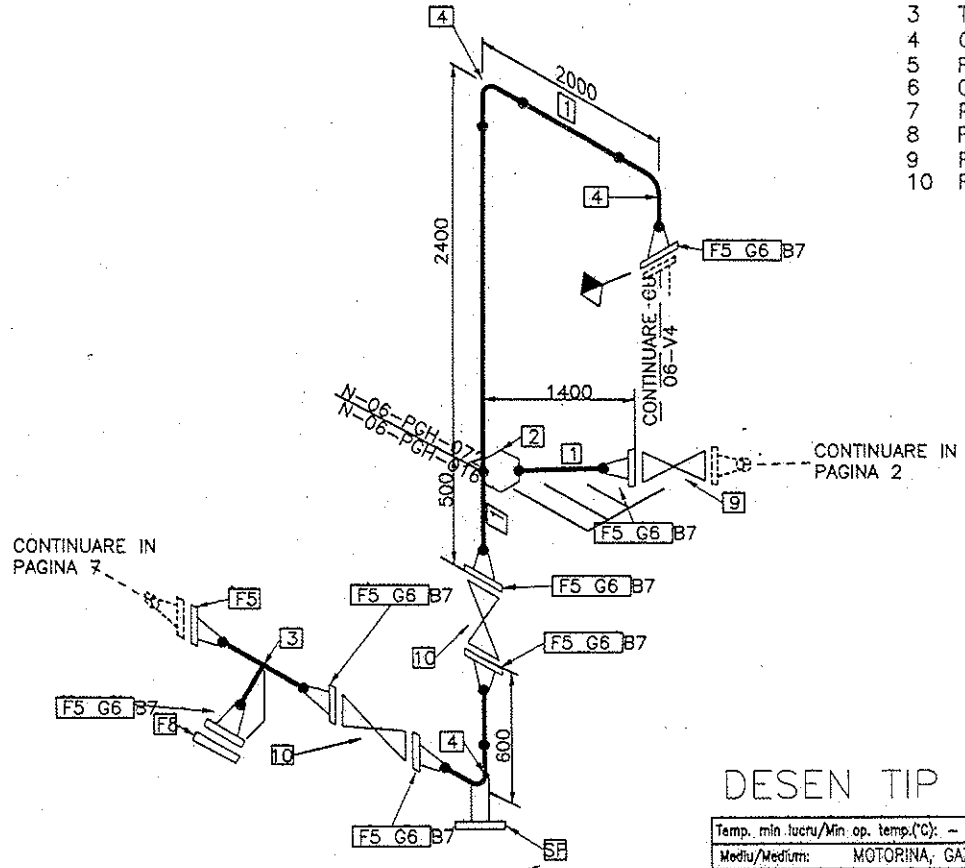


PIESE DE CONDUCTE – LISTA DE PIESE

| Poz | Descriere | DN | Cantitate |
|---|---|---|---|
| 1 | Teava | 250 | 7,0 M |
| 2 | Weldolet | 250X250 | 1 |
| 3 | Teu egal | 250 | 1 |
| 4 | Cot 90 | 250 | 3 |
| 5 | Flansa cu gat 10"(ø273x–)/600#/RF | 10" | 8 |
| 6 | Garnitura 10"/600#/RF | 10" | 7 |
| 7 | Prezoane cu 2 piulite | M27x150 | 96/192 |
| 8 | Flansa oarba 10"/900#/RF | 10" | 1 |
| 9 | RSF 10"/600#/RF | 10" | 1 |
| 10 | RSF 10"/900#/RF | 10" | 2 |

Numele și prenumele: DODON MARIUS
Atestat RADTE IMSP: DISPR/E/8234/03.04.2015
AVIZAT CORESPUNDE: C6/2010
Data: 10.2016 Semnătura:

LEGENDA:

–limita sistem

–conducta existenta supusa examinarii

–conducta existenta in afara sistemului

Configuratia, componenta si dimensiunile vor fi verificate inainte de examinare.

# DESEN TIP ANSAMBLU

| | | |
|---|---|---|
| Temp. min lucru/Min op. temp.(°C): – | Insoitori (nr./DN)/Tracing (nr./ND): NA | |
| Mediu/Medium: MOTORINA, GAZE H2S | Pres. max lucru/Max. op. pressure(bar): 75 | Temp. max lucru/Max op. temp.(°C): 50 |
| Grupa fluid/Fluid Group: 1 | Categorie/Category: III | Modul/Module: – |
| Material/Material: SA106Gr.A+SA234WPB | % control nedistructiv/Nondistructiv test: 25%-RT/UT 25%-PT/MT | Mediu proba/Test medium: Apa |
| Izolatie/Insulation (type/thick.): NA | Test elasticitate/Elasticity Test: – | Presiune proba/Test pressure(bar): 107,5 |
| Protectia corozlune/Corosion Protection: NA | Organ receptie finala/Final reception: – | Diagrama P&I/P&ID No.: – |
| Tratament termic/Heat Treatment: NA | Presiune proiectare/Design pressure(bar): 75 | Temp. de proiectare/Design temp.(°C):50 |
| Clasa conducte/Pipe Class: – | de la /from: 06-V4, SIS 25 | la /to: 06-K2, 06-NK3 |

TÜV AUSTRIA ROMANIA

S.C. PETROTEL-LUKOIL S.A. Ploiesti Str. Mihai Bravu, nr.235 Judet Prahova

LUKOIL OIL COMPANY

| 1 2 3 4 5 6 7 8 9 10 11 12 13 14 15 16 | | |
|---|---|---|
| Proiect-Nr/Project-No | Desen-Nr/Drawing-No | Rev/Rev |
| 16-274/PEVIT | ANEXA IV | 00 |
| 17 18 19 20 21 22 23 30 31 | | |
| Cod Instalatie/Plant Code | Orig.Plan | |

Intreprindere/Client: PETROTEL-LUKOIL

Instalatie/Plant: H.P.M

Scara/Scale: NTS

SIS 24-N-06-PGH-016, 030, 072 pag/pag 1 din/from 7

| Rev/Rev | Denumirea modificarii/Change description | Data/Date | Intocmit/Designer | Verificat/Checked |
|---|---|---|---|---|
| 04 | | | | |
| 03 | | | | |
| 02 | | | | |
| 01 | | | | |
| 00 | As Built | 06.2016 | Florea | Ninca |

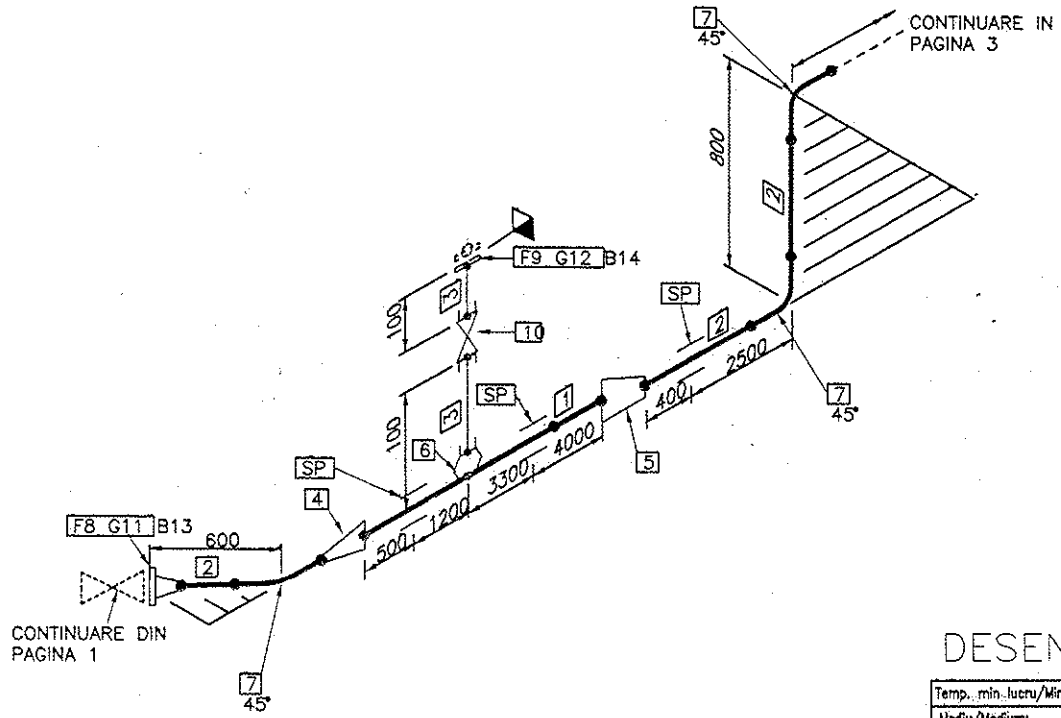


PIESE DE CONDUCTE – LISTA DE PIESE

| Poz | Descriere | DN | Cantitate |
|---|---|---|---|
| 1 | Teava | 300 | 9,0 M |
| 2 | Teava | 250 | 4,3 M |
| 3 | Teava | 20 | 0,2 M |
| 4 | Reductie concentrica | 300X250 | 1 |
| 5 | Reductie excentrica | 300X250 | 1 |
| 6 | Sockolet | 300X20 | 1 |
| 7 | Cot 45 | 250 | 3 |
| 8 | Flansa cu gat 10"(ø273x–)/600#/RF | 10" | 1 |
| 9 | Flansa Slip–on 3/4"/600#/RF | 3/4" | 1 |
| 10 | RSMS Dn20/Pn160 | 20 | 1 |
| 11 | Garnitura 10"/600#/RF | 250 | 1 |
| 12 | Garnitura 3/4"/600#/RF | 20 | 1 |
| 13 | Prezoane cu 2 piulite | M27x150 | 12/24 |
| 14 | Prezoane cu 2 piulite | M12x80 | 4/8 |

Numele și prenumele: DODON MARIUS

Atestat RADTE IMSP: DISPR/E/8234/03.04.2015

AVIZAT CORESPUNDE: C6/2010

Data: 10.2016 Semnătura:

LEGENDA:

–limita sistem

–conducta existenta supusa examinarii

–conducta existenta in afara sistemului

Configuratia, componenta si dimensiunile vor fi verificate inainte de examinare.

# DESEN TIP ANSAMBLU

| | | |
|---|---|---|
| Temp. min. lucru/Min. op. temp.(°C): – | Insoliteri (nr./DN)/Tracing (nr./ND): NA | |
| Mediu/Medium: MOTORINA, GAZE H2S | Pres. max lucru/Max. op. pressure(bar): 75 | Temp. max lucru/Max op. temp.(°C): 50 |
| Grupa fluid/Fluid Group: 1 | Categorie/Category: III | Modul/Module: – |
| Material/Material: SA106Gr.A+SA234WPB | % control nedistructiv/Nondistructiv test: 25%-RT/UT; 25%-PT/MT | Mediu proba/Test medium: Apa |
| Izolatie/Insulation (type/thick.): NA | Test elasticitate/Elasticity Test: – | Presiune proba/Test pressure(bar): 107,5 |
| Protectia coroziune/Corosion Protection: NA | Organ receptie finala/Final reception: – | Diagrama P&I/P&ID No.: – |
| Tratament termic/Heat Treatment: NA | Presiune proiectare/Design pressure(bar): 75 | Temp. de proiectare/Design temp.(°C):50 |
| Clasa conducte/Pipe Class: – | de la /from: 06–V4, SIS 25 | la /to: 06–K2, 06–NK3 |

TÜV AUSTRIA ROMANIA

S.C PETROTEL-LUKOIL S.A. Ploiesti Str. Mihai Bravu, nr.235 Judet Prahova

LUKOIL OIL COMPANY

| 1 | 2 | 3 | 4 | 5 | 6 | 7 | 8 | 9 | 10 | 11 | 12 | 13 | 14 | 15 | 16 |
|---|---|---|---|---|---|---|---|---|---|---|---|---|---|---|---|

| Proiect-Nr/Project-No | Desen-Nr/Drawing-No | Rev/Rev |
|---|---|---|
| 16-274/PEVIT | ANEXA IV | 00 |

| 17 | 18 | 19 | 20 | 21 | 22 | 23 | 30 | 31 |
|---|---|---|---|---|---|---|---|---|
| Cod Instalatie/Plant Code | | | | | | | Orig.Plan | |

Intreprindere/Client: PETROTEL–LUKOIL

Instalatie/Plant: H.P.M

Scara/Scale: NTS

| Rev/Rev | Denumirea modificarii/Change description | Data/Date | Intocmit/Designer | Verificat/Checked |
|---|---|---|---|---|
| 04 | | | | |
| 03 | | | | |
| 02 | | | | |
| 01 | | | | |
| 00 | As Built | 06.2016 | Florea T. | Ninca N. |

SIS 24–N–06–PGH–016, 030, 072 pag/pag 2 din/from 7

PIESE DE CONDUCTE – LISTA DE PIESE

| Poz | Descriere | DN | Cantitate |
|---|---|---|---|
| 1 | Teava | 300 | 11,68 M |
| 2 | Teava | 250 | 9,4 M |
| 3 | Reductie excentrica | 300X250 | 2 |
| 4 | Cot 90 | 300 | 1 |
| 5 | Cot 90 | 250 | 2 |

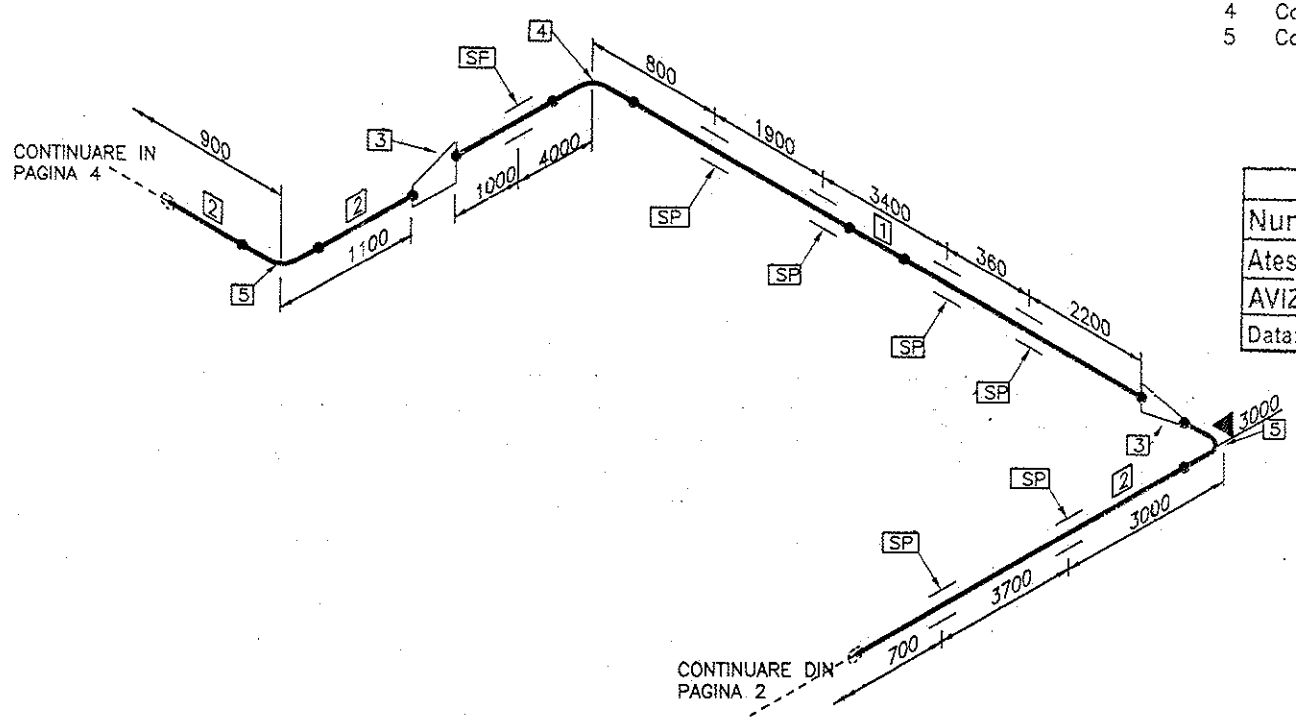


Numele și prenumele: DODON MARIUS
Atestat RADTE IMSP: DISPR/E/8234/03.04.2015
AVIZAT CORESPUNDE: C6/2010
Data: 10.2016 Semnătura:

LEGENDA:

–limita sistem

–conducta existenta supusa examinarii

–conducta existenta in afara sistemului

Configuratia, componenta si dimensiunile vor fi verificate inainte de examinare.

# DESEN TIP ANSAMBLU

| | | |
|---|---|---|
| Temp. min lucru/Min op. temp.(°C): – | Insotitori (nr./DN)/Tracing (nr./ND): NA | |
| Mediu/Medium: MOTORINA, GAZE H2S | Pres. max lucru/Max. op. pressure(bar): 75 | Temp. max lucru/Max op. temp.(°C): 50 |
| Grupa fluid/Fluid Group: 1 | Categorie/Category: III | Modul/Module: – |
| Material/Material: SA106Gr.A–SA234WPB | % control nedistructiv/Nondistructiv test: 25%-RT/UT; 25%-PT/MT | Mediu proba/Test medium: Apa |
| Izolatie/Insulation (type/thick.): NA | Test elasticitate/Elasticity Test: – | Presiune proba/Test pressure(bar): 107,5 |
| Protectia corozione/Corosion Protection: NA | Organ receptie finala/Final reception: – | Diagrama P&I/P&ID No.: – |
| Tratament termic/Heat Treatment: NA | Presiune proiectare/Design pressure(bar): 75 | Temp. de proiectare/Design temp.(°C):50 |
| Clasa conducte/Pipe Class: – | de la /from: 06–V4, SIS 25 | la /to: 06–K2, 06–NK3 |

TÜV AUSTRIA ROMANIA

S.C. PETROTEL-LUKOIL S.A. Ploiesti
Str. Mihai Bravu, nr.235
judet Prahova

LUKOIL OIL COMPANY

| 1 | 2 | 3 | 4 | 5 | 6 | 7 | 8 | 9 | 10 | 11 | 12 | 13 | 14 | 15 | 16 |
|---|---|---|---|---|---|---|---|---|---|---|---|---|---|---|---|
| Proiect-Nr/Project-No | | | | | | | Desen-Nr/Drawing-No | | | | | | | Rev/Rev | |
| 16-274/PEVIT | | | | | | | ANEXA IV | | | | | | | 00 | |

| 17 | 18 | 19 | 20 | 21 | 22 | 23 | 30 | 31 |
|---|---|---|---|---|---|---|---|---|
| Cod Instalatie/Plant Code | | | | | | | Orig.Plan | |

Intreprindere/Client: PETROTEL–LUKOIL

Instalatie/Plant: H.P.M

Scara/Scale: NTS

| Rev/Rev | Denumirea modificarii/Change description | Data/Date | Intocmit/Designer | Verificat/Checked |
|---|---|---|---|---|
| 04 | | | | |
| 03 | | | | |
| 02 | | | | |
| 01 | | | | |
| 00 | As Built | 06.2016 | Florea T. | Ninca N. |

SIS 24–N–06–PGH–016, 030, 072

N

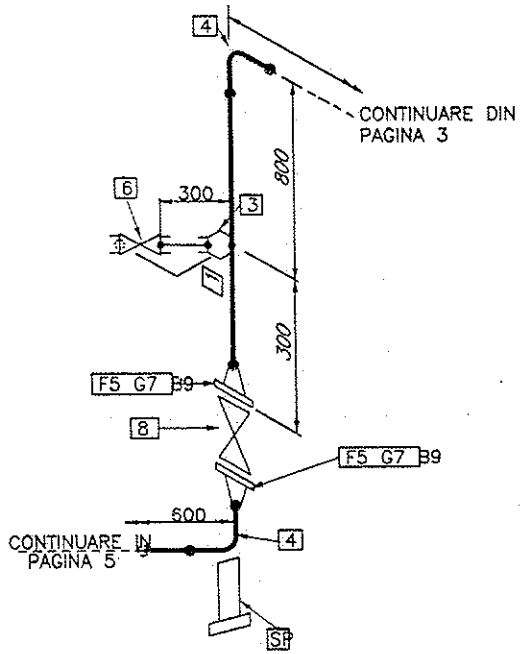


PIESE DE CONDUCTE – LISTA DE PIESE

| Poz | Descriere | DN | Cantitate |
|---|---|---|---|
| 1 | Teava | 250 | 1,7 M |
| 2 | Teava | 20 | 0,3 M |
| 3 | Sockolet | 250X20 | 1 |
| 4 | Cot 90 | 250 | 2 |
| 5 | Flansa cu gat 10"(ø273x–)/600#/RF | | 2 |
| 6 | RSMS Dn20/Pn160 | 20 | 1 |
| 7 | Garnitura 10"/600#/RF | 250 | 2 |
| 8 | RVF 10"/600#/RF | 10" | 1 |
| 9 | Prezoane cu 2 piulite | M27x150 | 24/48 |

Numele și prenumele: DODON MARIUS
Atestat RADTE IMSP: DISPR/E/8234/03.04.2015
AVIZAT CORESPUNDE: 06/2010
Data: 10.2016 Semnătura:

LEGENDA:

–limita sistem

–conducta existenta supusa examinarii

–conducta existenta in afara sistemului

Configuratia, componenta si dimensiunile vor fi verificate inainte de examinare.

# DESEN TIP ANSAMBLU

| | | |
|---|---|---|
| Temp. min lucru/Min op. temp.(°C): – | Insotitori (nr./DN)/Tracing (nr./ND): NA | |
| Mediu/Medium: MOTORINA, GAZE H2S | Pres. max lucru/Max. op. pressure(bar): 75 | Temp. max lucru/Max op. temp.(°C): 50 |
| Grupa fluid/Fluid Group: 1 | Categorie/Category: III | Modul/Module: – |
| Material/Material: SA106Gr.A+SA234WPB | % control nedistructiv/Nondistructiv test: 25%-RT/UT 25%-PT/MT | Mediu proba/Test medium: Apa |
| Izolatie/Insulation (type/thick.): NA | Test elasticitate/Elasticity Test: – | Presiune proba/Test pressure(bar): 107,5 |
| Protectia coroziune/Corosion Protection: NA | Organ receptie finala/Final reception: – | Diagrama P&I/P&ID No.: – |
| Tratament termic/Heat Treatment: NA | Presiune proiectare/Design pressure(bar): 75 | Temp. de proiectare/Design temp.(°C):50 |
| Clasa conducte/Pipe Class: – | de la /from: 06-V4, SIS 25 | la /to: 06-K2, 06-NK3 |

TÜV AUSTRIA ROMANIA

S.C. PETROTEL-LUKOIL S.A. Ploiesti
Str. Mihai Bravu, nr.235
Judet Prahova

LUKOIL OIL COMPANY

| 1 | 2 | 3 | 4 | 5 | 6 | 7 | 8 | 9 | 10 | 11 | 12 | 13 | 14 | 15 | 16 |
|---|---|---|---|---|---|---|---|---|---|---|---|---|---|---|---|
| Proiect-Nr/Project-No | | | | | | | Desen-Nr/Drawing-No | | | | | | | Rev/Rev | |
| 16-274/PSVII | | | | | | | ANEXA IV | | | | | | | 00 | |

| 17 | 18 | 19 | 20 | 21 | 22 | 23 | 30 | 31 |
|---|---|---|---|---|---|---|---|---|
| Cod Instalatie/Plant Code | | | | | | | Orig.Plan | |

Intreprindere/Client: PETROTEL-LUKOIL

Instalatie/Plant: H.P.M

Scara/Scale: NTS

SIS 24-N-06-PGH-016, 030, 072 pag/pag 4 din/from 7

| Rev/Rev | Denumirea modificarii/Change description | Data/Date | Intocmit/Designer | Verificat/Checked |
|---|---|---|---|---|
| 04 | | | | |
| 03 | | | | |
| 02 | | | | |
| 01 | | | | |
| 00 | As Built | 06.2016 | Florea T. | Ninca N. |

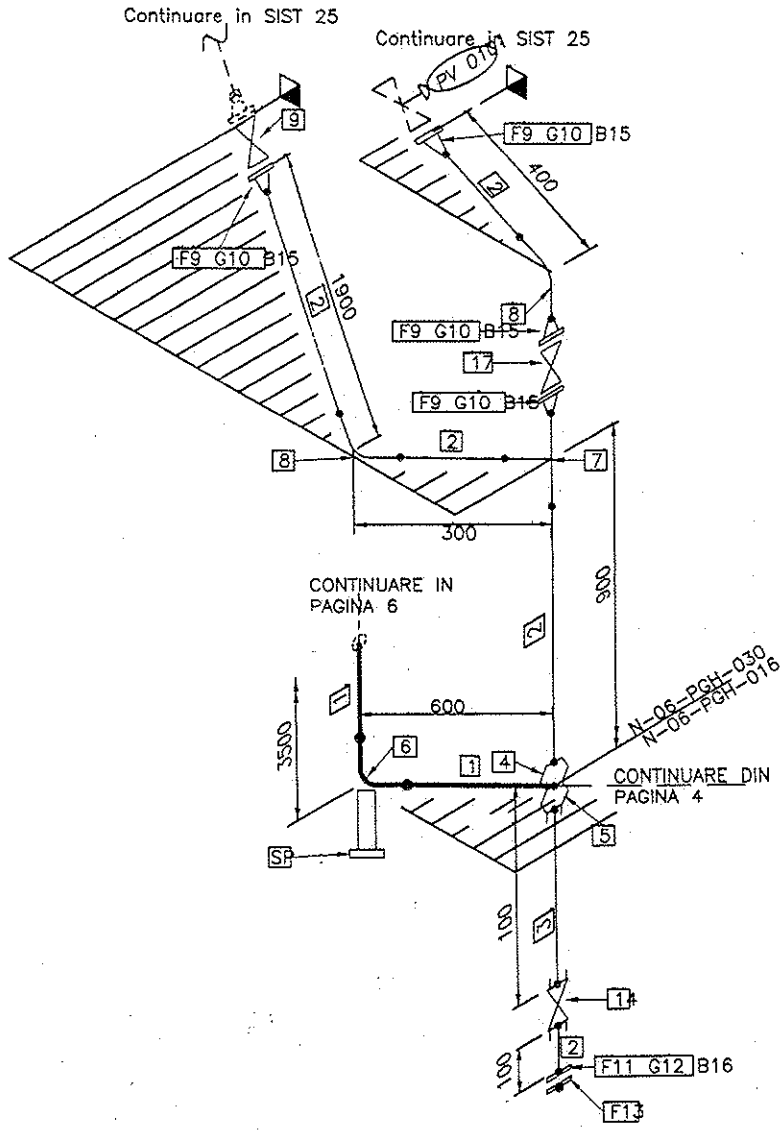


PIESE DE CONDUCTE – LISTA DE PIESE

| Poz | Descriere | DN | Cantitate |
|---|---|---|---|
| 1 | Teava | 250 | 4,1 M |
| 2 | Teava | 50 | 3,5 M |
| 3 | Teava | 20 | 0,2 M |
| 4 | Weldolet | 250X50 | 1 |
| 5 | Sockolet | 250X20 | 1 |
| 6 | Cot 90 | 250 | 1 |
| 7 | Teu egal | 50X50 | 1 |
| 8 | Cot 90 | 50 | 2 |
| 9 | Flansa cu gat 2"(ø60,3x–)/600#/RF | 2" | 4 |
| 10 | Garnitura 2"/600#/RF | 2" | 4 |
| 11 | Flansa plata 3/4"/600#/RF | 3/4" | 1 |
| 12 | Garnitura 3/4"/600#/RF | 3/4" | 1 |
| 13 | Flansa oarba 3/4"/600#/RF | 3/4" | 1 |
| 14 | RSMS 3/4"/600# | 3/4" | 1 |
| 15 | Prezoane cu 2 piulite | M16x90 | 16/32 |
| 16 | Prezoane cu 2 piulite | M12x80 | 4/8 |
| 17 | RSF 2"/600# | 2" | 1 |

Numele și prenumele: DODON MARIUS
Atestat RADTE IMSP: DISPR/E/8234/03.04.2015
AVIZAT CORESPUNDE: C6/2010
Data: 10.2016 Semnătura:

LEGENDA:

–limita sistem

–conducta existenta supusa examinarii

–conducta existenta in afara sistemului

Configuratia, componenta si dimensiunile vor fi verificate inainte de examinare.

# DESEN TIP ANSAMBLU

| | | | |
|---|---|---|---|
| Temp. min lucru/Min op. temp.(°C): – | Insoliteri (nr./DN)/Tracing (nr./ND): NA | | |
| Mediu/Medium: MOTORINA, GAZE H2S | Pres. max lucru/Max. op. pressure(bar): 75 | Temp. max lucru/Max op. temp.(°C): 50 | |
| Grupa fluid/Fluid Group: 1 | Categorie/Category: III | Modul/Module: – | |
| Material/Material: SA106Gr.A+SA234WPB | % control nedistructiv/Nondistructiv test: 25%-RT/UT 25%-PT/MT | Mediu proba/Test medium: Apa | |
| Izolatie/Insulation (type/thick.): NA | Test elasticitate/Elasticity Test: – | Presiune proba/Test pressure(bar): 107,5 | |
| Protectia corozione/Corosion Protection: NA | Organ receptie finala/Final reception: – | Diagrama P&I/P&ID No.: – | |
| Tratament termic/Heat Tractment: NA | Presiune proiectare/Design pressure(bar): 75 | Temp. de proiectare/Design temp.(°C):50 | |
| Clasa conducte/Pipe Class: – | de la /from: 06–V4, SIS 25 | la /to: 06–K2, 06–NK3 | |

TÜV AUSTRIA ROMANIA

S.C. PETROTEL-LUKOIL S.A. Ploiesti Str. Mihai Bravu, nr.235 judet Prahova

LUKOIL OIL COMPANY

| 1 | 2 | 3 | 4 | 5 | 6 | 7 | 8 | 9 | 10 | 11 | 12 | 13 | 14 | 15 | 16 |
|---|---|---|---|---|---|---|---|---|---|---|---|---|---|---|---|
| Proiect-Nr/Project-No | | | | | | Desen-Nr/Drawing-No | | | | | | | | Rev/Rev | |
| 16-274/PSVII | | | | | | ANEXA IV | | | | | | | | 00 | |

| 17 | 18 | 19 | 20 | 21 | 22 | 23 | 30 | 31 |
|---|---|---|---|---|---|---|---|---|
| Cod Instalatie/Plant Code | | | | | | Orig.Plan | | |

Intreprindere/Client: PETROTEL–LUKOIL

Instalatie/Plant: H.P.M

Scara/Scale: NTS

SIS 24–N–06–PGH–016, 030, 072 pag/pag 5 din/from 7

| Rev/Rev | Denumirea modificarii/Change description | Data/Date | Intocmit/Designer | Verificat/Checked |
|---|---|---|---|---|
| 04 | | | | |
| 03 | | | | |
| 02 | | | | |
| 01 | | | | |
| 00 | As Built | 06.2016 | Florea | Ninca N. |

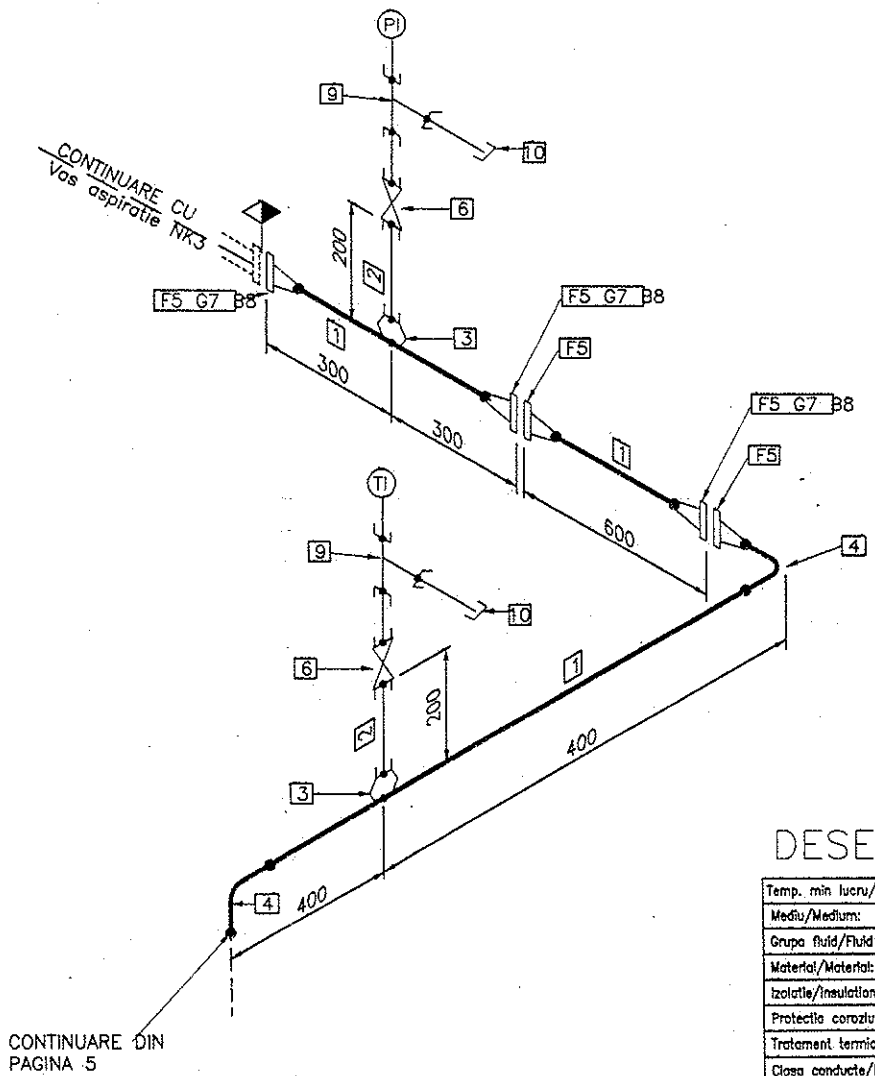


PIESE DE CONDUCTE – LISTA DE PIESE

| Poz | Descriere | DN | Cantitate |
|---|---|---|---|
| 1 | Teava | 250 | 2,0 M |
| 2 | Teava | 20 | 0,4 M |
| 3 | Sockolet | 250X20 | 2 |
| 4 | Cot 90 | 250 | 2 |
| 5 | Flansa cu gat 10"(ø273x–)/600#/RF | 10" | 5 |
| 6 | RSMS 3/4"/800# | 3/4" | 2 |
| 7 | Garnitura 10"/600"/RF | 10" | 3 |
| 8 | Prezoane cu 2 piulite | M27x150 | 36/72 |
| 9 | Teu egal mufa soclu | 20 | 2 |
| 10 | KMF | 20 | 2 |

Numele și prenumele: DODON MARIUS
Atestat RADTE IMSP: DISPR/E/8234/03.04.2015
AVIZAT CORESPUNDE: 6/2010
Data: 10.2016 Semnătura:

LEGENDA:

–limita sistem

–conducta existenta supusa examinarii

–conducta existenta in afara sistemului

Configuratia, componenta si dimensiunile vor fi verificate inainte de examinare.

# DESEN TIP ANSAMBLU

| | | |
|---|---|---|
| Temp. min lucru/Min op. temp.(°C): – | Insotitori (nr./DN)/Tracing (nr./ND): NA | |
| Mediu/Medium: MOTORINA, GAZE H2S | Pres. max lucru/Max. op. pressure(bar): 75 | Temp. max lucru/Max op. temp.(°C): 50 |
| Grupa fluid/Fluid Group: 1 | Categorie/Category: III | Modul/Module: – |
| Material/Material: SA106Gr.A+SA234WPB | % control nedistructiv/Nondistructiv test: 25%-RT/US 25%-PT/MT | Mediu proba/Test medium: Apa |
| Izolatie/Insulation (type/thick.): NA | Test elasticitate/Elasticity Test: – | Presiune proba/Test pressure(bar): 107,5 |
| Protectia corozione/Corosion Protection: NA | Organ receptie finala/Final reception: – | Diagrama P&I/P&ID No.: – |
| Tratament termic/Heat Treatment: NA | Presiune proiectare/Design pressure(bar): 75 | Temp. de proiectare/Design temp.(°C):50 |
| Clasa conducte/Pipe Class: – | de la /from: 06-V4, SIS 25 | la /to: 06-K2, 06-NK3 |

TÜV AUSTRIA ROMANIA

S.C. PETROTEL-LUKOIL S.A. Ploiesti Str. Mihai Bravu, nr.235 Judet Prahova

LUKOIL OILCOMPANY

| 1 | 2 | 3 | 4 | 5 | 6 | 7 | 8 | 9 | 10 | 11 | 12 | 13 | 14 | 15 | 16 |
|---|---|---|---|---|---|---|---|---|---|---|---|---|---|---|---|

| Proiect-Nr/Project-No | Desen-Nr/Drawing-No | Rev/Rev |
|---|---|---|
| 16-274/PEVIT | ANEXA IV | 00 |

| 17 | 18 | 19 | 20 | 21 | 22 | 23 | 30 | 31 |
|---|---|---|---|---|---|---|---|---|
| Cod Instalatie/Plant Code | | | | | | | Orig.Plan | |

Intreprindere/Client: PETROTEL-LUKOIL

Instalatie/Plant: H.P.M

Scara/Scale: NTS

SIS 24-N-06-PGH-016, 030, 072 pag/pag 6 din/from 7

| Rev/Rev | Denumirea modificarii/Change description | Data/Date | Intocmit/Designer | Verificat/Checked |
|---|---|---|---|---|
| 04 | | | | |
| 03 | | | | |
| 02 | | | | |
| 01 | | | | |
| 00 | As Built | 06.2016 | Florea | Ninca N. |

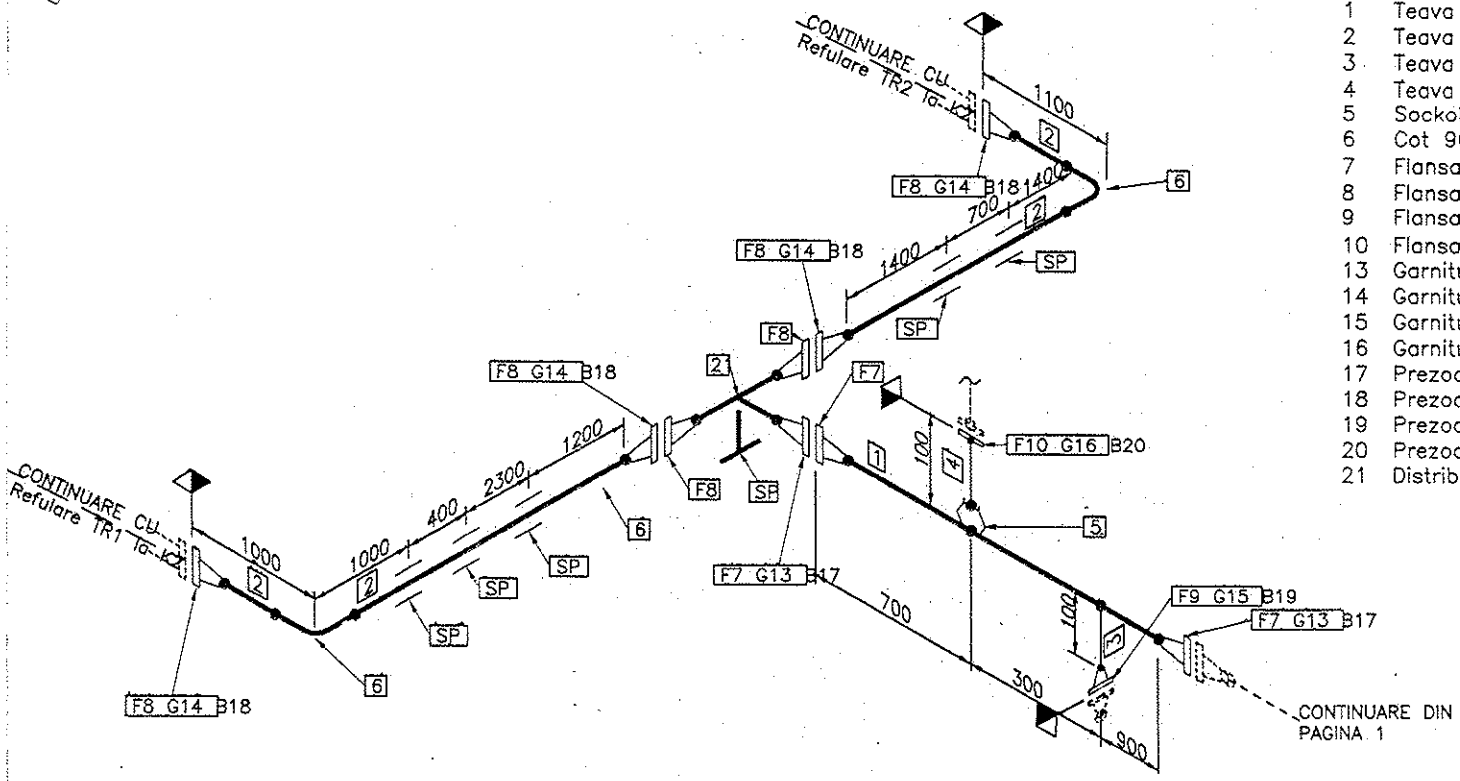


PIESE DE CONDUCTE – LISTA DE PIESE

| Poz | Descriere | DN | Cantitate |
|---|---|---|---|
| 1 | Teava | 250 | 1,9 M |
| 2 | Teava | 150 | 10,5 M |
| 3 | Teava | 50 | 0,1 M |
| 4 | Teava | 15 | 0,1 M |
| 5 | Sockolet | 250X15 | 1 |
| 6 | Cot 90 | 150 | 2 |
| 7 | Flansa cu gat 10"(ø273x–)/600#/RF | 10" | 3 |
| 8 | Flansa cu gat 6"(ø168,3x–)/600#/RF | 6" | 6 |
| 9 | Flansa cu gat 2"(ø60,3x–)/600#/RF | 2" | 1 |
| 10 | Flansa plata 1/2"(ø21,3x–)/600#/RF | 1/2" | 1 |
| 13 | Garnitura 10"/600#/RF | 10" | 2 |
| 14 | Garnitura 6"/600#/RF | 6" | 4 |
| 15 | Garnitura 2"/600#/RF | 2" | 1 |
| 16 | Garnitura 1/2"/600#/RF | 1/2" | 1 |
| 17 | Prezoane cu 2 piulite | M27x150 | 48/96 |
| 18 | Prezoane cu 2 piulite | M24x130 | 16/32 |
| 19 | Prezoane cu 2 piulite | M16x90 | 4/8 |
| 20 | Prezoane cu 2 piulite | M12x70 | 4/8 |
| 21 | Distributor | 250x150 | 1 |

LEGENDA:

–limita sistem

–conducta existenta supusa examinarii

–conducta existenta in afara sistemului

Configuratia, componenta si dimensiunile vor fi verificate inainte de examinare.

# DESEN TIP ANSAMBLU

| | | |
|---|---|---|
| Temp. min lucru/Min op. temp.(°C): – | Insotitori (nr./DN)/Tracing (nr./ND): NA | |
| Mediu/Medium: MOTORINA, GAZE H2S | Pres. max lucru/Max. op. pressure(bar): 75 | Temp. max lucru/Max op. temp.(°C): 50 |
| Grupa fluid/Fluid Group: 1 | Categorie/Category: III | Modul/Module: – |
| Material/Material: SA106Gr.A+SA234WPB | % control nedistructiv/Nondistructiv test: 25%-RT/UT; 25%-PT/MT | Mediu proba/Test medium: Apa |
| Izolatie/Insulation (type/thick.): NA | Test elasticitate/Elasticity Test: – | Presiune proba/Test pressure(bar): 107,5 |
| Protectia corozione/Corosion Protection: NA | Organ receptie finala/Final reception: – | Diagrama P&I/P&ID No.: – |
| Tratament termic/Heat Treatment: NA | Presiune proiectare/Design pressure(bar): 75 | Temp. de proiectare/Design temp.(°C):50 |
| Clasa conducte/Pipe Class: – | de la /from: 06–V4, SIS 25 | la /to: 06–K2, 06–NK3 |

Numele și prenumele: DODON MARIUS

Atestat RADTE IMSP: DISPR/E/8234/03.04.2015

AVIZAT CORESPUNDE: C6/2010

Data: 10-2016 Semnătura:

TÜV AUSTRIA ROMANIA

S.C. PETROTEL-LUKOIL S.A. Ploiesti Str. Mihai Bravu, nr.235 Judet Prahova

LUKOIL OILCOMPANY

| 1 | 2 | 3 | 4 | 5 | 6 | 7 | 8 | 9 | 10 | 11 | 12 | 13 | 14 | 15 | 16 |
|---|---|---|---|---|---|---|---|---|---|---|---|---|---|---|---|

| Proiect-Nr/Project-No | Desen-Nr/Drawing-No | Rev/Rev |
|---|---|---|
| 16-274/PEVIT | ANEXA IV | 00 |

| 17 | 18 | 19 | 20 | 21 | 22 | 23 | 30 | 31 |
|---|---|---|---|---|---|---|---|---|

Cod Instalatie/Plant Code | Orig.Plan

Intreprindere/Client: PETROTEL–LUKOIL

Instalatie/Plant: H.P.M

Scara/Scale: NTS

| Rev/Rev | Denumirea modificarii/Change description | Data/Date | Intocmit/Designer | Verificat/Checked |
|---|---|---|---|---|
| 04 | | | | |
| 03 | | | | |
| 02 | | | | |
| 01 | | | | |
| 00 | As Built | 06.2016 | Florea T. | Ninca N. |

SIS 24–N–06–PGH–016, 030, 072

pag/pag 7 din/from 7

## PIESE DE CONDUCTE – LISTA DE PIESE

| Poz | Descriere | DN | Cantitate |
|---|---|---|---|
| 1 | Teava | 250 | 7,0 M |
| 2 | Weldolet | 250X250 | 1 |
| 3 | Teu egal | 250 | 1 |
| 4 | Cot 90 | 250 | 3 |
| 5 | Flansa cu gat 10"(ø273x–)/600#/RF | 10" | 8 |
| 6 | Garnitura 10"/600#/RF | 10" | 7 |
| 7 | Prezoane cu 2 piulite | M27x150 | 96/192 |
| 8 | Flansa oarba 10"/900#/RF | 10" | 1 |
| 9 | RSF 10"/600#/RF | 10" | 1 |
| 10 | RSF 10"/900#/RF | 10" | 2 |

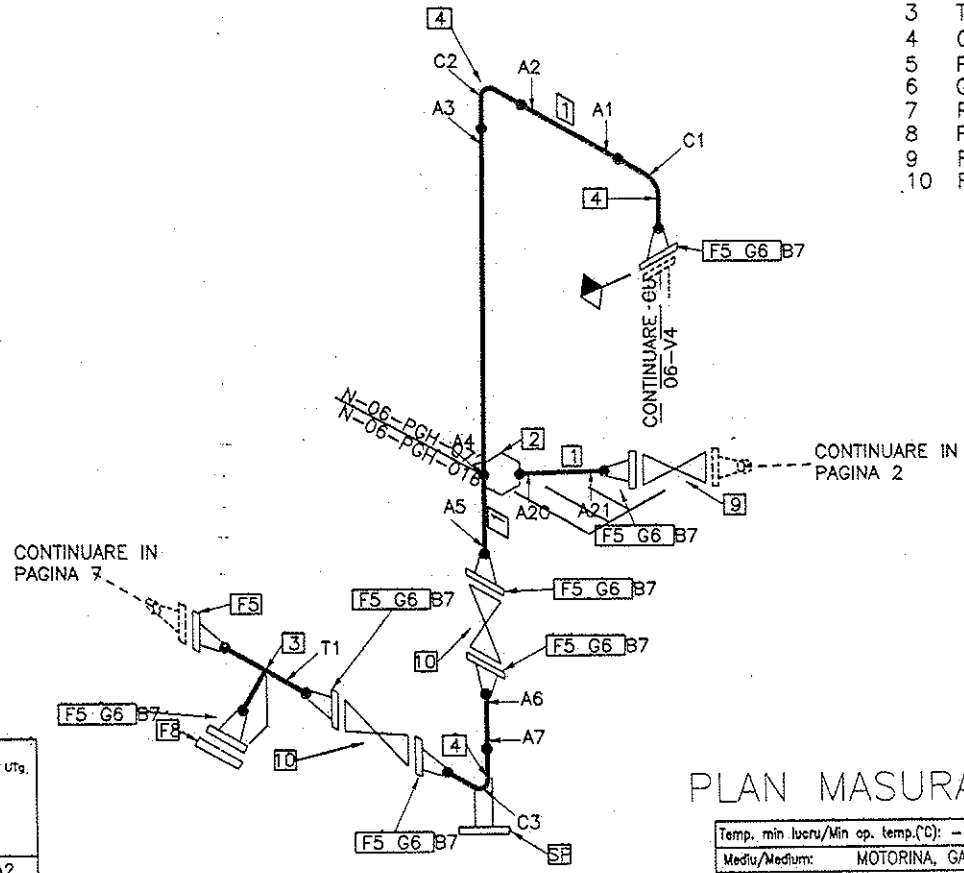


Numele și prenumele: DODON MARIUS
Atestat RADTE IMSP: DISPR/E/8234/03.04.2015
AVIZAT CORESPUNDE: Cf/20/0
Data: 05.2016 Semnătura:

LEGENDA:

–limita sistem

–conducta existenta supusa examinarii

–conducta existenta in afara sistemului

Configurația, componenta și dimensiunile vor fi verificate înainte de examinare.

PENTRU MASURAREA GROSIMII PERETILOR CU UTg.

Pentru DN<50 – 2 PUNCTE DE MASURARE(A,C)
Pentru DN>50 – 4 PUNCTE DE MASURARE(A,B,C,D)

Reductie–"R" A2 A1 A1 A2 "T" A4 A3

Cot–"C" A3 A2 A1

A1 A2 Tronson–"A"

Fara masuratoare pe intrados pe secțiunile A1 și A3

# PLAN MASURATORI DE GROSIME

| | | | |
|---|---|---|---|
| Temp. min lucru/Min op. temp.(°C): – | Insotitori (nr./DN)/Tracing (nr./ND): NA | | |
| Mediu/Medium: MOTORINA, GAZE H2S | Pres. max lucru/Max. op. pressure(bar): 75 | Temp. max lucru/Max op. temp.(°C): 50 | |
| Grupa fluid/Fluid Group: 1 | Categorie/Category: III | Modul/Module: – | |
| Material/Material: – | % control nedistructiv/Nondistructiv test: 25%-RT/UT 25%-PT/MT | Mediu probo/Test medium: Apa | |
| Izolatie/Insulation (type/thick.): NA | Test elasticitate/Elasticity Test: – | Presiune probo/Test pressure(bar): – | |
| Protectia coroziune/Corosion Protection: NA | Organ receptie finala/Final reception: – | Diagrama P&I/P&ID No.: – | |
| Tratament termic/Heat Treatment: NA | Presiune proiectare/Design pressure(bar): 75 | Temp. de proiectare/Design temp.(°C):50 | |
| Clasa conducte/Pipe Class: – | de la /from: 06–V4, SIS 25 | la /to: 06–K2, 06–NK3 | |

TÜV AUSTRIA ROMANIA

S.C. PETROTEL-LUKOIL S.A. Ploiesti
Str. Mihai Bravu, nr.235
Judet Prahova

LUKOIL OIL COMPANY

| 1 | 2 | 3 | 4 | 5 | 6 | 7 | 8 | 9 | 10 | 11 | 12 | 13 | 14 | 15 | 16 |
|---|---|---|---|---|---|---|---|---|---|---|---|---|---|---|---|
| Proiect-Nr/Project-No | | | | | | | Desen-Nr/Drawing-No | | | | | | | Rev/Rev | |
| 16-274/PEVIT | | | | | | | ANEXA 3 | | | | | | | 00 | |

| 17 | 18 | 19 | 20 | 21 | 22 | 23 | 30 | 31 |
|---|---|---|---|---|---|---|---|---|
| Cod Instalatie/Plant Code | | | | | | | Orig.Plan | |

Intreprindere/Client: PETROTEL–LUKOIL

Instalatie/Plant: H.P.M

Scara/Scale: NTS

SIS 24–N–06–PGH–016, 030, 072 pag/pag 1 din/from 7

| Rev/Rev | Denumirea modificarii/Change description | Data/Date | Intocmit/Designer | Verificat/Checked |
|---|---|---|---|---|
| 04 | | | | |
| 03 | | | | |
| 02 | | | | |
| 01 | | | | |
| 00 | INTOCMIRE PROGRAM EXAMINARI | 03.2016 | Florea | Ninca N. |

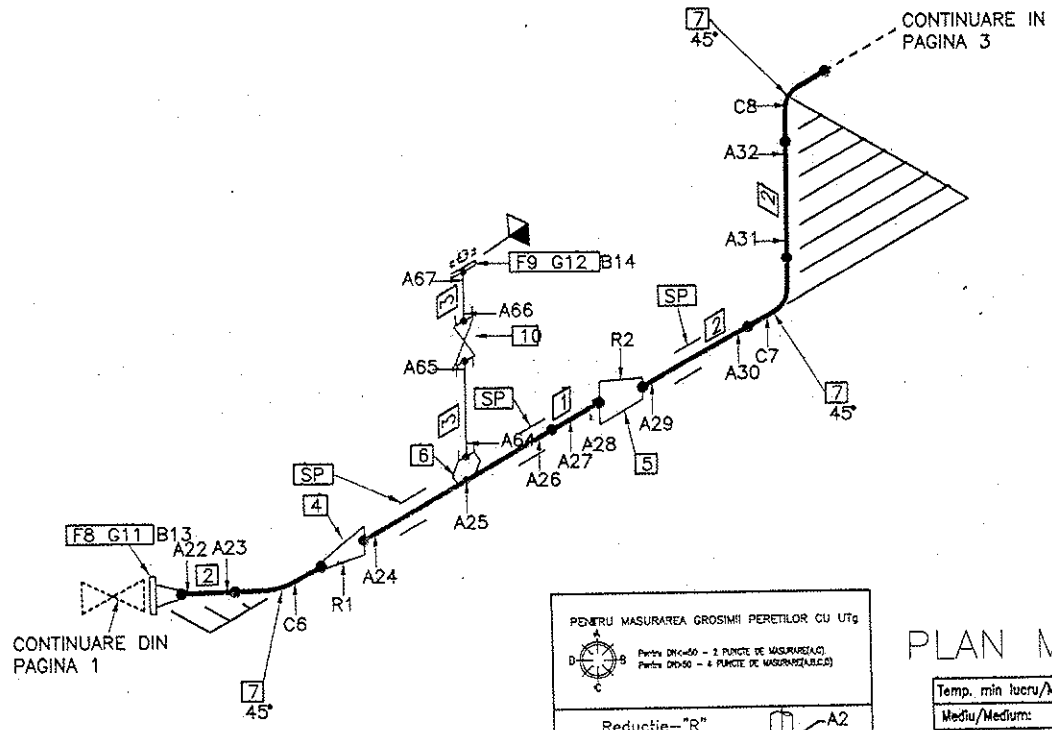


PIESE DE CONDUCTE – LISTA DE PIESE

| Poz | Descriere | DN | Cantitate |
|---|---|---|---|
| 1 | Teava | 300 | 9,0 M |
| 2 | Teava | 250 | 4,3 M |
| 3 | Teava | 20 | 0,2 M |
| 4 | Reductie concentrica | 300X250 | 1 |
| 5 | Reductie excentrica | 300X250 | 1 |
| 6 | Sockolet | 300X20 | 1 |
| 7 | Cot 45 | 250 | 3 |
| 8 | Flansa cu gat 10"(ø273x–)/600#/RF | 10" | 1 |
| 9 | Flansa Slip–on 3/4"/600#/RF | 3/4" | 1 |
| 10 | RSMS Dn20/Pn160 | 20 | 1 |
| 11 | Garnitura 10"/600#/RF | 250 | 1 |
| 12 | Garnitura 3/4"/600#/RF | 20 | 1 |
| 13 | Prezoane cu 2 piulite | M27x150 | 12/24 |
| 14 | Prezoane cu 2 piulite | M12x80 | 4/8 |

Numele și prenumele: DODON MARIUS
Atestat RADTE IMSP: DISPR/E/8234/03.04.2015
AVIZAT CORESPUNDE: C6/8/0
Data: 05.2016 Semnătura:

LEGENDA:

–limita sistem

–conducta existenta supusa examinarii

–conducta existenta in afara sistemului

Configuratia, componenta si dimensiunile vor fi verificate inainte de examinare.

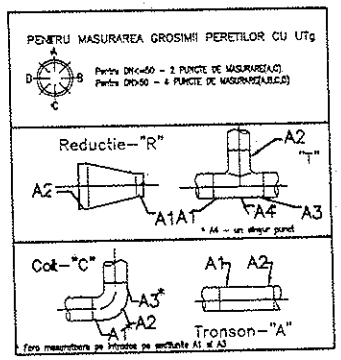


# PLAN MASURATORI DE GROSIME

| | | |
|---|---|---|
| Temp. min lucru/Min op. temp.(°C): – | Insotitori (nr./DN)/Tracing (nr./ND): NA | |
| Mediu/Medium: MOTORINA, GAZE H2S | Pres. max lucru/Max. op. pressure(bar): 75 | Temp. max lucru/Max op. temp.(°C): 50 |
| Grupa fluid/Fluid Group: 1 | Categorie/Category: III | Modul/Module: – |
| Material/Material: – | % control nedistructiv/Nondistructiv test: 25%-RT/UT; 25%-PT/MT | Mediu probo/Test medium: Apa |
| Izolatie/Insulation (type/thick.): NA | Test elasticitate/Elasticity Test: – | Presiune proba/Test pressure(bar): – |
| Protectia coroziune/Corrosion Protection: NA | Organ receptie finala/Final reception: – | Diagrama P&I/P&ID No.: – |
| Tratament termic/Heat Treatment: NA | Presiune proiectare/Design pressure(bar): 75 | Temp. de proiectare/Design temp.(°C):50 |
| Clasa conducte/Pipe Class: – | de la /from: 06–V4, SIS 25 | la /to: 06–K2, 06–NK3 |

TÜV AUSTRIA ROMANIA

S.C. PETROTEL-LUKOIL S.A. Ploiesti
Str. Mihai Bravu, nr.235
Judet Prahova

LUKOIL OIL COMPANY

| 1 | 2 | 3 | 4 | 5 | 6 | 7 | 8 | 9 | 10 | 11 | 12 | 13 | 14 | 15 | 16 |
|---|---|---|---|---|---|---|---|---|---|---|---|---|---|---|---|
| Project-Nr/Project-No | | | | | | Desen-Nr/Drawing-No | | | | | | | | Rev/Rev | |
| 16-274/PEVIT | | | | | | ANEXA 3 | | | | | | | | 00 | |

| 17 | 18 | 19 | 20 | 21 | 22 | 23 | 30 | 31 |
|---|---|---|---|---|---|---|---|---|
| Cod Instalatie/Plant Code | | | | | | | Orig.Plan | |

Intreprindere/Client: PETROTEL–LUKOIL

Instalatie/Plant: H.P.M

Scara/Scale: NTS

SIS 24–N–06–PGH–016, 030, 072 pag/pag 2 din/from 7

| Rev/Rev | Denumirea modificarii/Change description | Data/Date | Intocmit/Designer | Verificat/Checked |
|---|---|---|---|---|
| 04 | | | | |
| 03 | | | | |
| 02 | | | | |
| 01 | | | | |
| 00 | INTOCMIRE PROGRAM EXAMINARI | 03.2016 | Florea T. | Ninca N. |

PIESE DE CONDUCTE – LISTA DE PIESE

| Poz | Descriere | DN | Cantitate |
|---|---|---|---|
| 1 | Teava | 300 | 11,68 M |
| 2 | Teava | 250 | 9,4 M |
| 3 | Reductie excentrica | 300X250 | 2 |
| 4 | Cot 90 | 300 | 1 |
| 5 | Cot 90 | 250 | 2 |

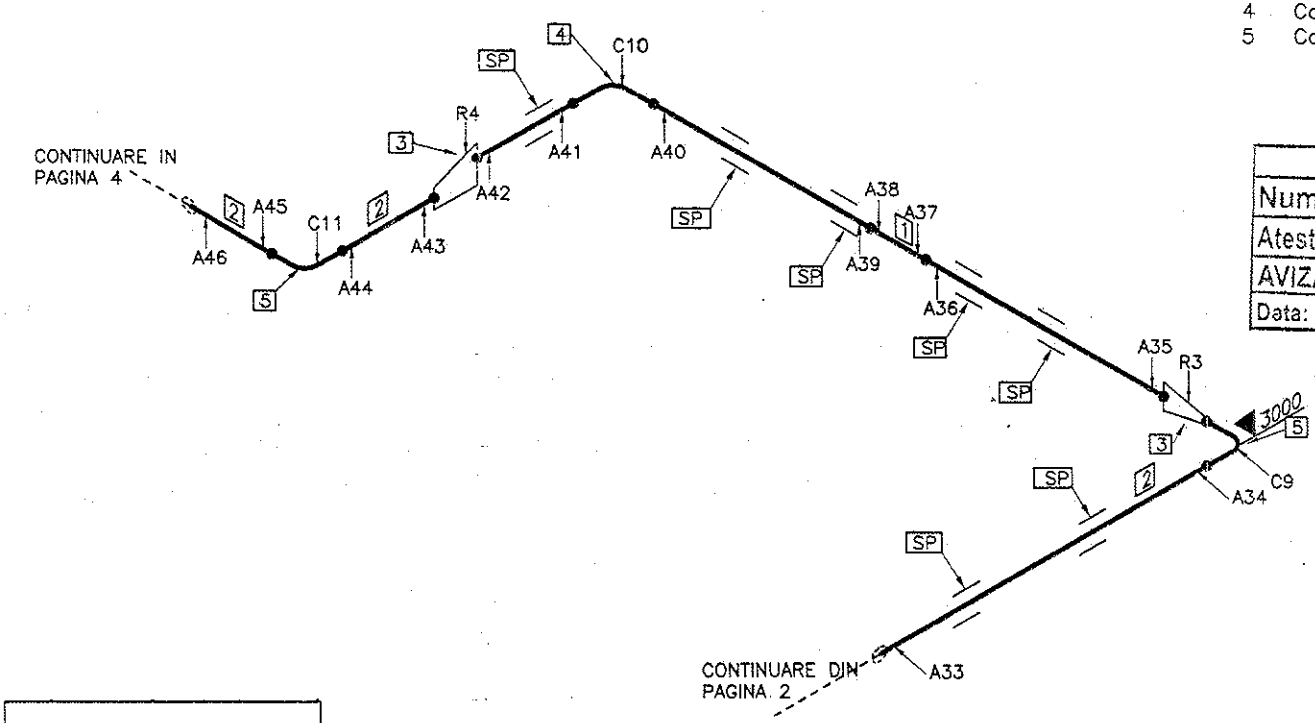


Numele și prenumele: DODON MARIUS
Atestat RADTE IMSP: DISPR/E/8234/03.04.2015
AVIZAT CORESPUNDE: C6/2010
Data: 05-2016 Semnătura:

LEGENDA:

–limita sistem

–conducta existenta supusa examinarii

–conducta existenta in afara sistemului

Configuratia, componenta si dimensiunile vor fi verificate inainte de examinare.

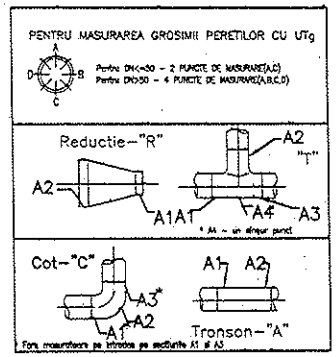


# PLAN MASURATORI DE GROSIME

| | | | |
|---|---|---|---|
| Temp. min lucru/Min op. temp.(°C): – | Insotitori (nr./DN)/Tracing (nr./ND): NA | | |
| Mediu/Medium: MOTORINA, GAZE H2S | Pres. max lucru/Max. op. pressure(bar): 75 | Temp. max lucru/Max op. temp.(°C): 50 | |
| Grupa fluid/Fluid Group: 1 | Categorie/Category: III | Modul/Module: – | |
| Material/Material: – | % control nedistructiv/Nondistructiv test: 25%-RT/UT 25%-PT/MT | Mediu proba/Test medium: Apa | |
| Izolatie/Insulation (type/thick.): NA | Test elasticitate/Elasticity Test: – | Presiune proba/Test pressure(bar): – | |
| Protectia coroziune/Corosion Protection: NA | Organ receptie finala/Final reception: – | Diagrama P&I/P&ID No.: – | |
| Tratament termic/Heat Treatment: NA | Presiune proiectare/Design pressure(bar): 75 | Temp. de proiectare/Design temp.(°C):50 | |
| Clasa conducte/Pipe Class: – | de la /from: 06–V4, SIS 25 | la /to: 06–K2, 06–NK3 | |

TÜV AUSTRIA ROMANIA

S.C. PETROTEL-LUKOIL S.A. Ploiesti
Str. Mihai Bravu, nr.235
Judet Prahova

LUKOIL OIL COMPANY

| 1 | 2 | 3 | 4 | 5 | 6 | 7 | 8 | 9 | 10 | 11 | 12 | 13 | 14 | 15 | 16 |
|---|---|---|---|---|---|---|---|---|---|---|---|---|---|---|---|
| Proiect-Nr/Project-No | | | | | | Desen-Nr/Drawing-No | | | | | | | | Rev/Rev | |
| 16-274/PEVIT | | | | | | ANEXA 3 | | | | | | | | 00 | |

| 17 | 18 | 19 | 20 | 21 | 22 | 23 | 30 | 31 |
|---|---|---|---|---|---|---|---|---|
| Cod Instalatie/Plant Code | | | | | | | Orig.Plan | |

Intreprindere/Client: PETROTEL–LUKOIL

Instalatie/Plant: H.P.M

Scara/Scale: NTS

| Rev/Rev | Denumirea modificarii/Change description | Data/Date | Intocmit/Designer | Verificat/Checked |
|---|---|---|---|---|
| 04 | | | | |
| 03 | | | | |
| 02 | | | | |
| 01 | | | | |
| 00 | INTOCMIRE PROGRAM EXAMINARI | 03.2016 | Florea T. | Ninca N. |

SIS 24–N–06–PGH–016, 030, 072

PIESE DE CONDUCTE – LISTA DE PIESE

| Poz | Descriere | DN | Cantitate |
|---|---|---|---|
| 1 | Teava | 250 | 1,7 M |
| 2 | Teava | 20 | 0,3 M |
| 3 | Sockolet | 250X20 | 1 |
| 4 | Cot 90 | 250 | 2 |
| 5 | Flansa cu gat 10"(ø273x–)/600#/RF | 250 | 2 |
| 6 | RSMS Dn20/Pn160 | 20 | 1 |
| 7 | Garnitura 10"/600#/RF | 250 | 2 |
| 8 | RVF 10"/600#/RF | 10" | 1 |
| 9 | Prezoane cu 2 piulite | M27x150 | 24/48 |

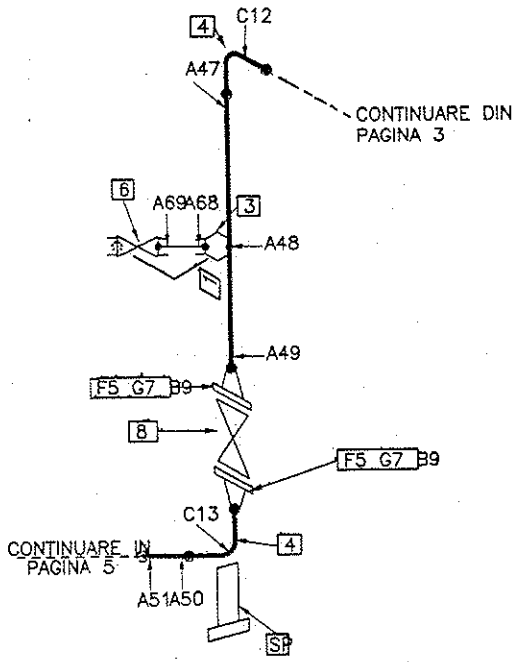


Numele și prenumele: DODON MARIUS
Atestat RADTE IMSP: DISPR/E/8234/03.04.2015
AVIZAT CORESPUNDE: C6/2010
Data: 05.2016 Semnătura:

LEGENDA:

–limita sistem

–conducta existenta supusa examinarii

–conducta existenta in afara sistemului

Configuratia, componenta si dimensiunile vor fi verificate inainte de examinare.

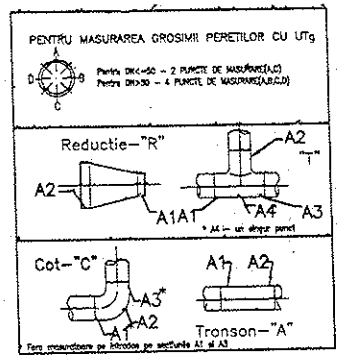


# PLAN MASURATORI DE GROSIME

| | | |
|---|---|---|
| Temp. min lucru/Min op. temp.(°C): – | Insoliteri (nr./DN)/Tracing (nr./ND): NA | Temp. max lucru/Max op. temp.(°C): 50 |
| Mediu/Medium: MOTORINA, GAZE H2S | Pres. max lucru/Max. op. pressure(bar): 75 | Modul/Module: – |
| Grupa fluid/Fluid Group: 1 | Categorie/Category: III | Mediu proba/Test medium: Apa |
| Material/Material: – | % control nedistructiv/Nondistructiv test: 25%-RT/US 25%-RT/MT | Presiune proba/Test pressure(bar): – |
| Izolatie/Insulation (type/thick.): NA | Test elasticitate/Elasticity Test: – | Diagrama P&I/P&ID No.: – |
| Protectia coroziune/Corosion Protection: NA | Organ receptie finala/Final reception: – | Temp. de proiectare/Design temp.(°C):50 |
| Tratament termic/Heat Treatment: NA | Presiune proiectare/Design pressure(bar): 75 | Temp. de proiectare/Design temp.(°C):50 |
| Clasa conducte/Pipe Class: – | de la /from: 06–V4, SIS 25 | la /to: 06–K2, 06–NK3 |

TÜV AUSTRIA ROMANIA

S.C. PETROTEL-LUKOIL S.A. Ploiesti Str. Mihai Bravu, nr.235 Judet Prahova

LUKOIL OIL COMPANY

| 1 | 2 | 3 | 4 | 5 | 6 | 7 | 8 | 9 | 10 | 11 | 12 | 13 | 14 | 15 | 16 |
|---|---|---|---|---|---|---|---|---|---|---|---|---|---|---|---|

| Proiect-Nr/Project-No | Desen-Nr/Drawing-No | Rev/Rev |
|---|---|---|
| 16-274/PEVIT | ANEXA 3 | 00 |

| 17 | 18 | 19 | 20 | 21 | 22 | 23 | 30 | 31 |
|---|---|---|---|---|---|---|---|---|

Cod Instalatie/Plant Code | Orig.Plan

Intreprindere/Client: PETROTEL–LUKOIL

Instalatie/Plant: H.P.M

Scara/Scale: NTS

SIS 24–N–06–PGH–016, 030, 072 pag/pag 4 din/from 7

| Rev/Rev | Denumirea modificarii/Change description | Data/Date | Intocmit/Designer | Verificat/Checked |
|---|---|---|---|---|
| 04 | | | | |
| 03 | | | | |
| 02 | | | | |
| 01 | | | | |
| 00 | INTOCMIRE PROGRAM EXAMINARI | 03.2016 | Florea T. | Ninca N. |

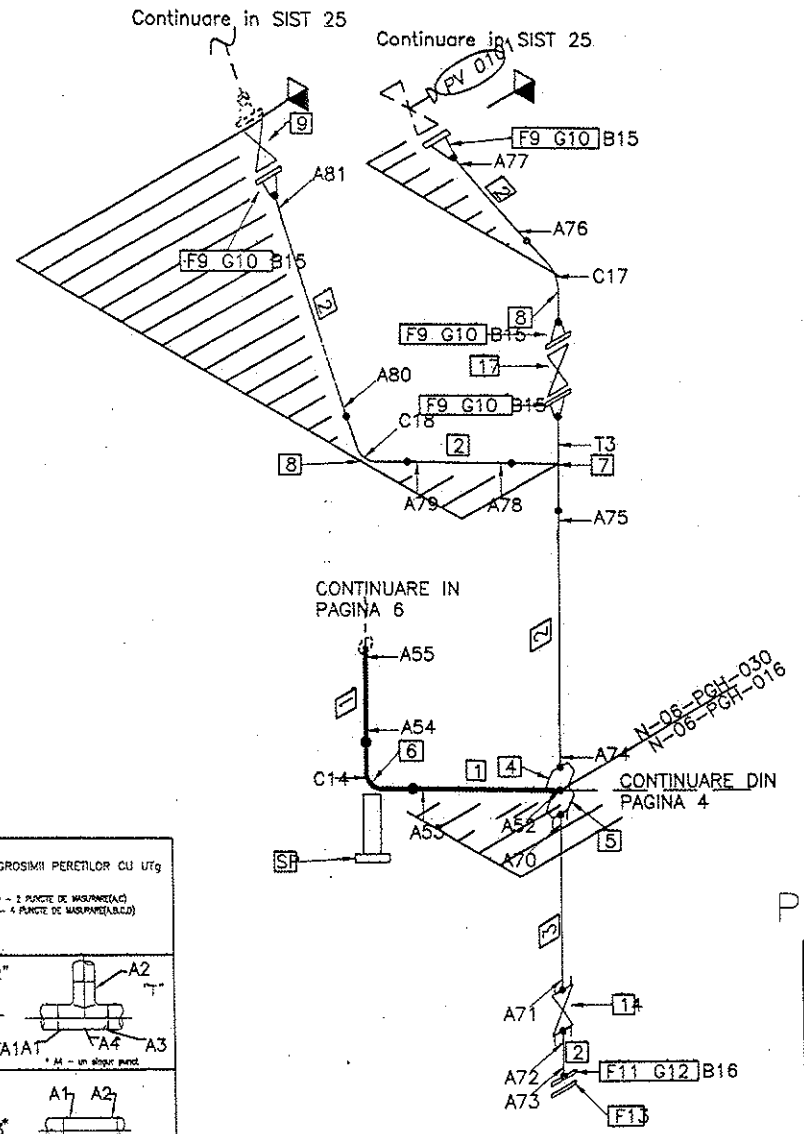


PIESE DE CONDUCTE – LISTA DE PIESE

| Poz | Descriere | DN | Cantitate |
|---|---|---|---|
| 1 | Teava | 250 | 4,1 M |
| 2 | Teava | 50 | 3,5 M |
| 3 | Teava | 20 | 0,2 M |
| 4 | Weldolet | 250X50 | 1 |
| 5 | Sockolet | 250X20 | 1 |
| 6 | Cot 90 | 250 | 1 |
| 7 | Teu egal | 50X50 | 1 |
| 8 | Cot 90 | 50 | 2 |
| 9 | Flansa cu gat 2"(ø60,3x–)/600#/RF | 2" | 4 |
| 10 | Garnitura 2"/600#/RF | 2" | 4 |
| 11 | Flansa plata 3/4"/600#/RF | 3/4" | 1 |
| 12 | Garnitura 3/4"/600#/RF | 3/4" | 1 |
| 13 | Flansa oarba 3/4"/600#/RF | 3/4" | 1 |
| 14 | RSMS 3/4"/600# | 3/4" | 1 |
| 15 | Prezoane cu 2 piulite | M16x90 | 16/32 |
| 16 | Prezoane cu 2 piulite | M12x80 | 4/8 |
| 17 | RSF 2"/600# | 2" | 1 |

Numele și prenumele: DODON MARIUS
Atestat RADTE IMSP: DISPR/E/8234/03.04.2015
AVIZAT CORESPUNDE: C6/20/10
Data: 05.2016 Semnătura

LEGENDA:

–limita sistem

–conducta existenta supusa examinarii

–conducta existenta in afara sistemului

Configuratia, componenta si dimensiunile vor fi verificate inainte de examinare.

PENTRU MASURAREA GROSIMII PERETILOR CU UTg

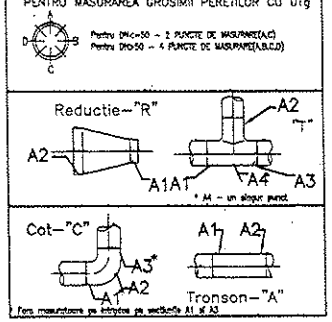


# PLAN MASURATORI DE GROSIME

| | | | |
|---|---|---|---|
| Temp. min lucru/Min op. temp.(°C): – | Insotitori (nr./DN)/Tracing (nr./ND): NA | | |
| Mediu/Medium: MOTORINA, GAZE H2S | Pres. max lucru/Max. op. pressure(bar): 75 | Temp. max lucru/Max op. temp.(°C): 50 | |
| Grupa fluid/Fluid Group: 1 | Categorie/Category: III | Modul/Module: – | |
| Material/Material: – | % control nedistructiv/Nondistructiv test: 25%-RT/UT; 25%-PT/MT | Mediu proba/Test medium: Apa | |
| Izolatie/Insulation (type/thick.): NA | Test elasticitate/Elasticity Test: – | Presiune proba/Test pressure(bar): – | |
| Protectia coroziune/Corrosion Protection: NA | Organ receptie finala/Final reception: – | Diagrama P&I/P&ID No.: – | |
| Tratament termic/Heat Treatment: NA | Presiune proiectare/Design pressure(bar): 75 | Temp. de proiectare/Design temp.(°C):50 | |
| Clasa conducte/Pipe Class: – | de la /from: 06–V4, SIS 25 | la /to: 06–K2, 06–NK3 | |

TÜV AUSTRIA ROMANIA

S.C. PETROTEL-LUKOIL S.A. Ploiesti
Str. Mihai Bravu, nr.235
Judet Prahova

LUKOIL OIL COMPANY

| Proiect-Nr/Project-No | Desen-Nr/Drawing-No | Rev/Rev |
|---|---|---|
| 16-274/PEVIT | ANEXA 3 | 00 |

Intreprindere/Client: PETROTEL–LUKOIL
Cod Instalatie/Plant Code | Orig.Plan
Instalatie/Plant: H.P.M
Scara/Scale: NTS

| Rev/Rev | Denumirea modificarii/Change description | Data/Date | Intocmit/Designer | Verificat/Checked |
|---|---|---|---|---|
| 04 | | | | |
| 03 | | | | |
| 02 | | | | |
| 01 | | | | |
| 00 | INTOCMIRE PROGRAM EXAMINARI | 03.2016 | Florea T. | Ninca N. |

SIS 24–N–06–PGH–016, 030, 072 pag/pag 5 din/from 7

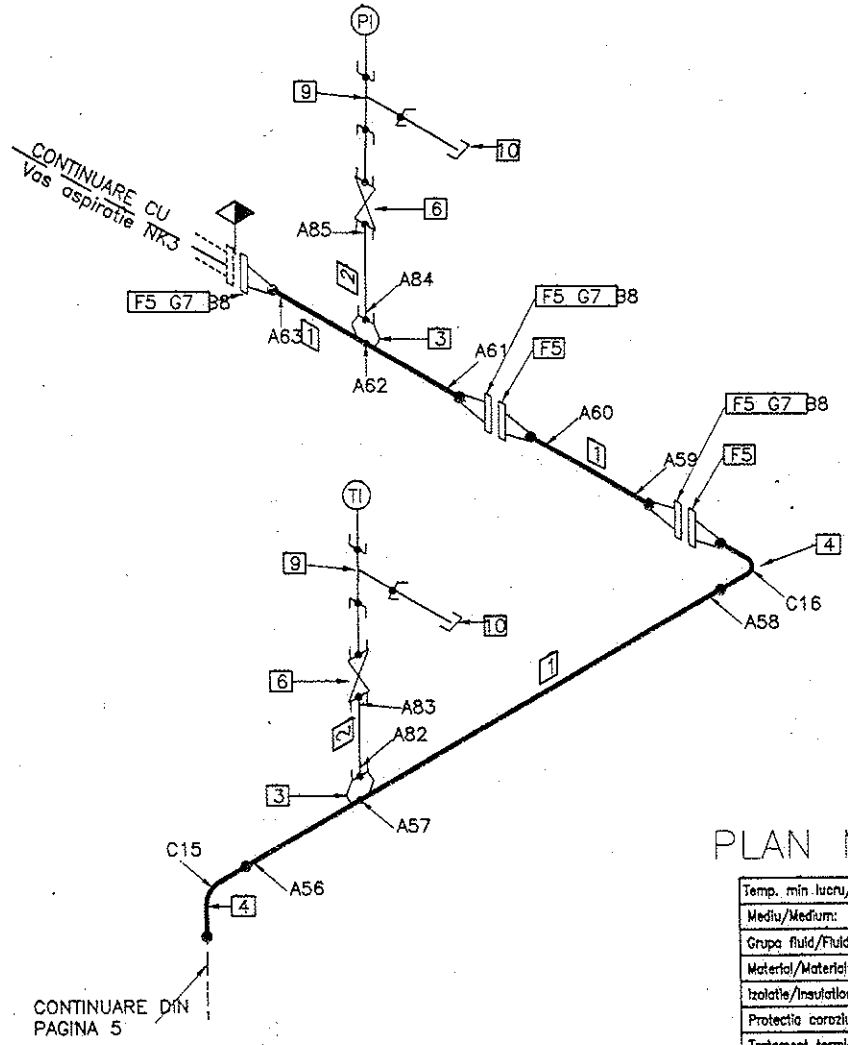


PIESE DE CONDUCTE – LISTA DE PIESE

| Poz | Descriere | DN | Cantitate |
|---|---|---|---|
| 1 | Teava | 250 | 2,0 M |
| 2 | Teava | 20 | 0,4 M |
| 3 | Sockolet | 250X20 | 2 |
| 4 | Cot 90 | 250 | 2 |
| 5 | Flansa cu gat 10"(ø273x–)/600#/RF | 10" | 5 |
| 6 | RSMS 3/4"/800# | 3/4" | 2 |
| 7 | Garnitura 10"/600"/RF | 10" | 3 |
| 8 | Prezoane cu 2 piulite | M27x150 | 36/72 |
| 9 | Teu egal mufa soclu | 20 | 2 |
| 10 | KMF | 20 | 2 |

Numele și prenumele: DODON MARIUS
Atestat RADTE IMSP: DISPR/E/8234/03.04.2015
AVIZAT CORESPUNDE: 06/20/0
Data: 05.2016 Semnătura:

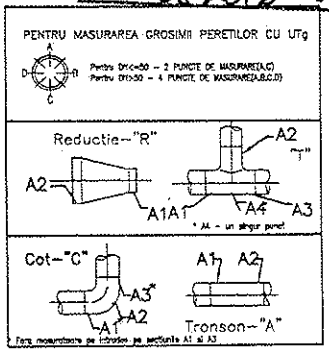


LEGENDA:

–limita sistem

–conducta existenta supusa examinarii

–conducta existenta in afara sistemului

Configuratia, componenta si dimensiunile vor fi verificate inainte de examinare.

# PLAN MASURATORI DE GROSIME

| | | |
|---|---|---|
| Temp. min lucru/Min op. temp.(°C): – | Insotitori (nr./DN)/Tracing (nr./ND): NA | |
| Mediu/Medium: MOTORINA, GAZE H2S | Pres. max lucru/Max. op. pressure(bar): 75 | Temp. max lucru/Max op. temp.(°C): 50 |
| Grupa fluid/Fluid Group: 1 | Categorie/Category: III | Modul/Module: – |
| Material/Material: – | % control nedistructiv/Nondistructiv test: 25%-RT/UT 25%-PT/MT | Mediu proba/Test medium: Apa |
| Izolatie/Insulation (type/thick.): NA | Test elasticitate/Elasticity Test: – | Presiune proba/Test pressure(bar): – |
| Protectia coroziune/Corosion Protection: NA | Organ receptie finala/Final reception: – | Diagrama P&I/P&ID No.: – |
| Tratament termic/Heat Treatment: NA | Presiune proiectare/Design pressure(bar): 75 | Temp. de proiectare/Design temp.(°C):50 |
| Clasa conducte/Pipe Class: – | de la /from: 06–V4, SIS 25 | la /to: 06–K2, 06–NK3 |

TÜV AUSTRIA ROMANIA

S.C. PETROTEL-LUKOIL S.A. Ploiesti Str. Mihai Bravu, nr.235 Judet Prahova

LUKOIL OILCOMPANY

| Proiect-Nr/Project-No | Desen-Nr/Drawing-No | Rev/Rev |
|---|---|---|
| 16-274/PEVIT | ANEXA 3 | 00 |

Intreprindere/Client: PETROTEL–LUKOIL

Instalatie/Plant: H.P.M

Cod Instalatie/Plant Code | Orig.Plan

Scara/Scale: NTS

SIS 24–N–06–PGH–016, 030, 072

pag/pag 6 din/from 7

| Rev/Rev | Denumirea modificarii/Change description | Data/Date | Intocmit/Designer | Verificat/Checked |
|---|---|---|---|---|
| 04 | | | | |
| 03 | | | | |
| 02 | | | | |
| 01 | | | | |
| 00 | INTOCMIRE PROGRAM EXAMINARI | 03.2016 | Florea T. | Ninca N. |

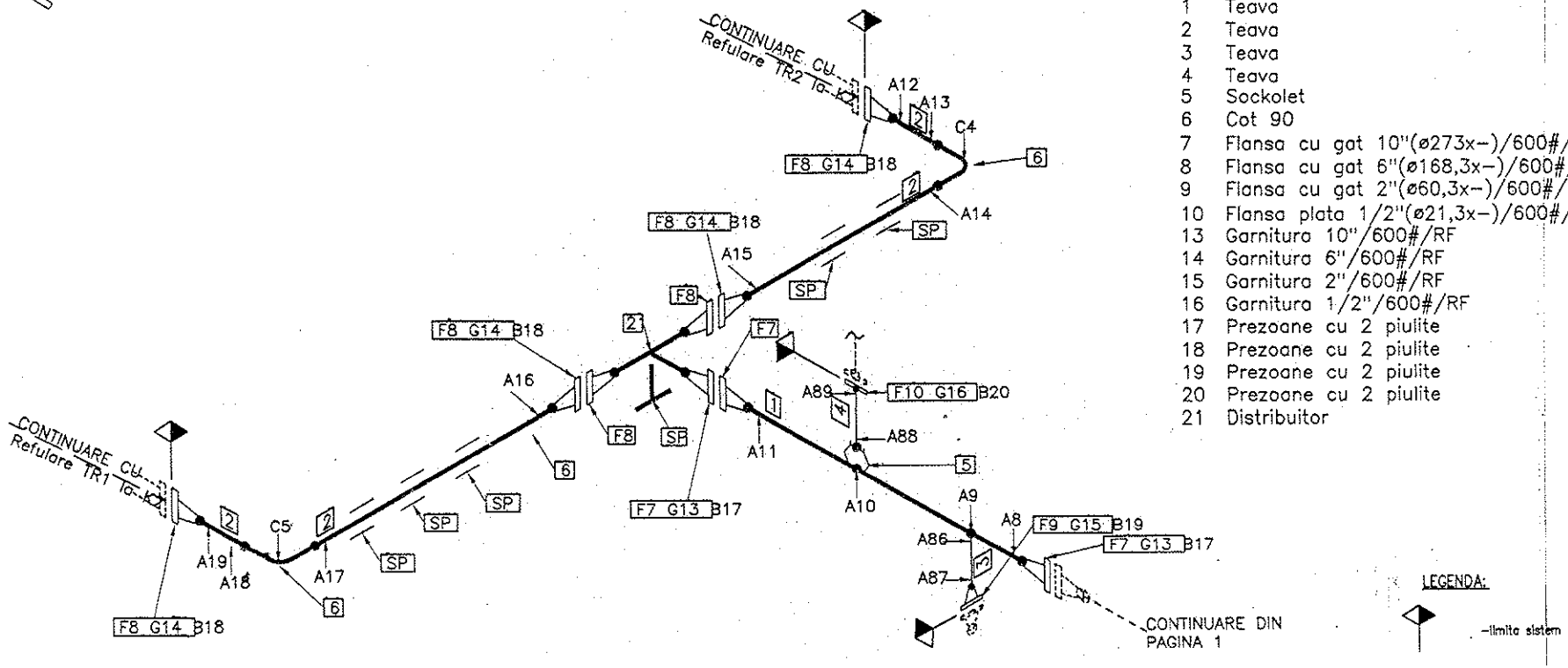


PIESE DE CONDUCTE – LISTA DE PIESE

| Poz | Descriere | DN | Cantitate |
|---|---|---|---|
| 1 | Teava | 250 | 1,9 M |
| 2 | Teava | 150 | 10,5 M |
| 3 | Teava | 50 | 0,1 M |
| 4 | Teava | 15 | 0,1 M |
| 5 | Sockolet | 250X15 | 1 |
| 6 | Cot 90 | 150 | 2 |
| 7 | Flansa cu gat 10"(ø273x-)/600#/RF | 10" | 3 |
| 8 | Flansa cu gat 6"(ø168,3x-)/600#/RF | 6" | 6 |
| 9 | Flansa cu gat 2"(ø60,3x-)/600#/RF | 2" | 1 |
| 10 | Flansa plata 1/2"(ø21,3x-)/600#/RF | 1/2" | 1 |
| 13 | Garnitura 10"/600#/RF | 10" | 2 |
| 14 | Garnitura 6"/600#/RF | 6" | 4 |
| 15 | Garnitura 2"/600#/RF | 2" | 1 |
| 16 | Garnitura 1/2"/600#/RF | 1/2" | 1 |
| 17 | Prezoane cu 2 piulite | M27x150 | 48/96 |
| 18 | Prezoane cu 2 piulite | M24x130 | 16/32 |
| 19 | Prezoane cu 2 piulite | M16x90 | 4/8 |
| 20 | Prezoane cu 2 piulite | M12x70 | 4/8 |
| 21 | Distribuitor | 250x150 | 1 |

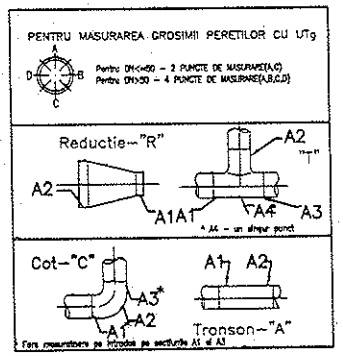


# PLAN MASURATORI DE GROSIME

Configuratia, componenta si dimensiunile vor fi verificate inainte de examinare.

| | | |
|---|---|---|
| Temp. min lucru/Min op. temp.(°C): – | Insotitori (nr./DN)/Tracing (nr./ND): NA | |
| Mediu/Medium: MOTORINA, GAZE H2S | Pres. max lucru/Max. op. pressure(bar): 75 | Temp. max lucru/Max op. temp.(°C): 50 |
| Grupa fluid/Fluid Group: 1 | Categorie/Category: III | Modul/Module: – |
| Material/Material: – | % control nedistructiv/Nondistructiv test: 25%-RT/UT; 25%-PT/MT | Mediu proba/Test medium: Apa |
| Izolatie/Insulation (type/thick.): NA | Test elasticitate/Elasticity Test: – | Presiune proba/Test pressure(bar): – |
| Protectia coroziune/Corosion Protection: NA | Organ receptie finala/Final reception: – | Diagrama P&I/P&ID No.: – |
| Tratament termic/Heat Treatment: NA | Presiune proiectare/Design pressure(bar): 75 | Temp. de proiectare/Design temp.(°C):50 |
| Clasa conducte/Pipe Class: – | de la /from: 06-V4, SIS 25 | la /to: 06-K2, 06-NK3 |

TÜV AUSTRIA ROMANIA

S.C. PETROTEL-LUKOIL S.A. Ploiesti, Str. Mihai Bravu, nr.235, Judet Prahova

LUKOIL OIL COMPANY

| 1 | 2 | 3 | 4 | 5 | 6 | 7 | 8 | 9 | 10 | 11 | 12 | 13 | 14 | 15 | 16 |
|---|---|---|---|---|---|---|---|---|---|---|---|---|---|---|---|

| Proiect-Nr/Project-No | Desen-Nr/Drawing-No | Rev/Rev |
|---|---|---|
| 16-274/PEVIT | ANEXA 3 | 00 |

| 17 | 18 | 19 | 20 | 21 | 22 | 23 | 30 | 31 |
|---|---|---|---|---|---|---|---|---|

Cod Instalatie/Plant Code | Orig.Plan

Intreprindere/Client: PETROTEL-LUKOIL

Instalatie/Plant: H.P.M

Scara/Scale: NTS

SIS 24-N-06-PGH-016, 030, 072 pag/pag 7 din/from 7

Numele și prenumele: DODON MARIUS
Atestat RADTE IMSP: DISPR/E/8234/03.04.2015
AVIZAT CORESPUNDE: 06/2016
Data: 05.2016 Semnătura:

| Rev/Rev | Denumirea modificarii/Change description | Data/Date | Intocmit/Designer | Verificat/Checked |
|---|---|---|---|---|
| 04 | | | | |
| 03 | | | | |
| 02 | | | | |
| 01 | | | | |
| 00 | INTOCMIRE PROGRAM EXAMINARI | 03.2016 | Florea T. | Ninca N. |

LUKOIL OIL COMPANY

TUV AUSTRIA ROMANIA

SIS REVIAR DE CALCU -06-PGH-016, 030, 072-300

| COMANDA | | icat(e) | 1975 | NR. | ANEXA III | | | |
|---|---|---|---|---|---|---|---|---|
| | | | | PAG | | DIN | | |
| BENEFICIAR | S.C. PETROTEL-LUKOIL S.A. | | | REV | DATA | INTOCMIT | VERIFICAT | APROBAT |
| | | | | 0 | 09.2016 | Cretu G. | Balind I. | Ninca N. |
| INSTALATIA | HPM | | | 1 | | | | |
| | | | | 2 | | | | |

CARACTERISTICI TEHNICE CONDUCTE / CALCULUL DE DIMENSIONARE LA PRESIUNEA INTERIOARA

| Nr. crt | SIMBOL | MATERIAL | $P_c$ [bar] | $p_c$ [N/mm²] | DN | $D_e$ [mm] | T [°C] | $T_i$ [°C] | $R_{p0,2t}$ [N/mm²] | υ [°C] | $R_{p0,2t}$ [N/mm²] | $R_{p0,2t}'$ [N/mm²] | $R_m$ [N/mm²] | f [N/mm²] | z | e' [mm] | $c_0$ [mm] | $c_1$ [mm] | $c_2$ [mm] | $e_r$ [mm] | $e_{ord}$ [mm] | $e_a$ [mm] | e'' [mm] | gros. min. de intoc. $e_{min}$ [mm] |
|---|---|---|---|---|---|---|---|---|---|---|---|---|---|---|---|---|---|---|---|---|---|---|---|---|
| 1 | C1 | SA234WPB | 75,0 | 7,5 | 250 | 273 | 50 | 40 | 205 | 65 | 195 | 201 | 330 | 134,00 | 1 | 7,43 | 3 | 1,59 | 0 | 12,0 | 12,70 | 8,11 | 7,93 | 8,50 |
| 2 | A1-A2 | SA106-GrA | 75,0 | 7,5 | 250 | 273 | 50 | 40 | 205 | 65 | 195 | 201 | 330 | 134,00 | 1 | 7,43 | 3 | 1,99 | 0 | 12,4 | 15,88 | 10,9 | 7,93 | 8,50 |
| 3 | C2 | SA234WPB | 75,0 | 7,5 | 250 | 273 | 50 | 40 | 205 | 65 | 195 | 201 | 330 | 134,00 | 1 | 7,43 | 3 | 1,59 | 0 | 12,0 | 12,70 | 8,11 | 7,93 | 8,50 |
| 4 | A3-A4-A5 | SA106-GrA | 75,0 | 7,5 | 250 | 273 | 50 | 40 | 205 | 65 | 195 | 201 | 330 | 134,00 | 1 | 7,43 | 3 | 1,59 | 0 | 12,0 | 12,70 | 8,11 | 7,93 | 8,50 |
| 5 | A6-A7 | SA106-GrA | 75,0 | 7,5 | 250 | 273 | 50 | 40 | 205 | 65 | 195 | 201 | 330 | 134,00 | 1 | 7,43 | 3 | 1,59 | 0 | 12,0 | 12,70 | 8,11 | 7,93 | 8,50 |
| 6 | C3 | SA234WPB | 75,0 | 7,5 | 250 | 273 | 50 | 40 | 205 | 65 | 195 | 201 | 330 | 134,00 | 1 | 7,43 | 3 | 1,59 | 0 | 12,0 | 12,70 | 8,11 | 7,93 | 8,50 |
| 7 | T1 | SA234WPB | 75,0 | 7,5 | 250 | 273 | 50 | 40 | 205 | 65 | 195 | 201 | 330 | 134,00 | 1 | 7,43 | 3 | 1,59 | 0 | 12,0 | 12,70 | 8,11 | 7,93 | 8,50 |
| 8 | A8-A9-A10-A11 | SA106-GrA | 75,0 | 7,5 | 250 | 273 | 50 | 40 | 205 | 65 | 195 | 201 | 330 | 134,00 | 1 | 7,43 | 3 | 1,78 | 0 | 12,2 | 14,27 | 9,49 | 7,93 | 8,50 |
| 9 | A12-A13 | SA106-GrA | 75,0 | 7,5 | 150 | 168,3 | 50 | 40 | 205 | 65 | 195 | 201 | 330 | 134,00 | 1 | 4,58 | 3 | 1,99 | 0 | 9,6 | 15,88 | 10,9 | 5,08 | 5,50 |
| 10 | C4 | SA234WPB | 75,0 | 7,5 | 150 | 168,3 | 50 | 40 | 205 | 65 | 195 | 201 | 330 | 134,00 | 1 | 4,58 | 3 | 1,99 | 0 | 9,6 | 15,88 | 10,9 | 5,08 | 5,50 |
| 11 | A14-A15 | SA106-GrA | 75,0 | 7,5 | 150 | 168,3 | 50 | 40 | 205 | 65 | 195 | 201 | 330 | 134,00 | 1 | 4,58 | 3 | 1,99 | 0 | 9,6 | 15,88 | 10,9 | 5,08 | 5,50 |
| 12 | A16-A17 | SA106-GrA | 75,0 | 7,5 | 150 | 168,3 | 50 | 40 | 205 | 65 | 195 | 201 | 330 | 134,00 | 1 | 4,58 | 3 | 1,37 | 0 | 9,0 | 10,97 | 6,6 | 5,08 | 5,50 |
| 13 | C5 | SA234WPB | 75,0 | 7,5 | 150 | 168,3 | 50 | 40 | 205 | 65 | 195 | 201 | 330 | 134,00 | 1 | 4,58 | 3 | 1,37 | 0 | 9,0 | 10,97 | 6,6 | 5,08 | 5,50 |
| 14 | A18-A19 | SA106-GrA | 75,0 | 7,5 | 150 | 168,3 | 50 | 40 | 205 | 65 | 195 | 201 | 330 | 134,00 | 1 | 4,58 | 3 | 1,37 | 0 | 9,0 | 10,97 | 6,6 | 5,08 | 5,50 |
| 15 | A20-A21 | SA106-GrA | 75,0 | 7,5 | 250 | 273 | 50 | 40 | 205 | 65 | 195 | 201 | 330 | 134,00 | 1 | 7,43 | 3 | 1,59 | 0 | 12,0 | 12,70 | 8,11 | 7,93 | 8,50 |
| 16 | A22-A23 | SA106-GrA | 75,0 | 7,5 | 250 | 273 | 50 | 40 | 205 | 65 | 195 | 201 | 330 | 134,00 | 1 | 7,43 | 3 | 1,59 | 0 | 12,0 | 12,70 | 8,11 | 7,93 | 8,50 |
| 17 | C6 | SA234WPB | 75,0 | 7,5 | 250 | 273 | 50 | 40 | 205 | 65 | 195 | 201 | 330 | 134,00 | 1 | 7,43 | 3 | 1,99 | 0 | 12,4 | 15,88 | 10,9 | 7,93 | 8,50 |
| 18 | R1 | SA234WPB | 75,0 | 7,5 | 300 | 323,9 | 50 | 40 | 205 | 65 | 195 | 201 | 330 | 134,00 | 1 | 8,82 | 3 | 2,19 | 0 | 14,0 | 17,48 | 12,3 | 9,32 | 9,50 |
| 19 | A24-A25-A26 | SA106-GrA | 75,0 | 7,5 | 300 | 323,9 | 50 | 40 | 205 | 65 | 195 | 201 | 330 | 134,00 | 1 | 8,82 | 3 | 1,99 | 0 | 13,8 | 15,88 | 10,9 | 9,32 | 9,50 |
| 20 | A27-A28 | SA106-GrA | 75,0 | 7,5 | 300 | 323,9 | 50 | 40 | 205 | 65 | 195 | 201 | 330 | 134,00 | 1 | 8,82 | 3 | 2,19 | 0 | 14,0 | 17,48 | 12,3 | 9,32 | 9,50 |
| 21 | R2 | SA234WPB | 75,0 | 7,5 | 300 | 323,9 | 50 | 40 | 205 | 65 | 195 | 201 | 330 | 134,00 | 1 | 8,82 | 3 | 2,38 | 0 | 14,2 | 19,05 | 13,7 | 9,32 | 9,50 |
| 22 | A29-A30 | SA106-GrA | 75,0 | 7,5 | 250 | 273 | 50 | 40 | 205 | 65 | 195 | 201 | 330 | 134,00 | 1 | 7,43 | 3 | 1,99 | 0 | 12,4 | 15,88 | 10,9 | 7,93 | 8,50 |
| 23 | C7 | SA234WPB | 75,0 | 7,5 | 250 | 273 | 50 | 40 | 205 | 65 | 195 | 201 | 330 | 134,00 | 1 | 7,43 | 3 | 1,99 | 0 | 12,4 | 15,88 | 10,9 | 7,93 | 8,50 |
| 24 | A31-A32 | SA106-GrA | 75,0 | 7,5 | 250 | 273 | 50 | 40 | 205 | 65 | 195 | 201 | 330 | 134,00 | 1 | 7,43 | 3 | 1,99 | 0 | 12,4 | 15,88 | 10,9 | 7,93 | 8,50 |
| 25 | C8 | SA234WPB | 75,0 | 7,5 | 250 | 273 | 50 | 40 | 205 | 65 | 195 | 201 | 330 | 134,00 | 1 | 7,43 | 3 | 1,99 | 0 | 12,4 | 15,88 | 10,9 | 7,93 | 8,50 |
| 26 | A33-A34 | SA106-GrA | 75,0 | 7,5 | 250 | 273 | 50 | 40 | 205 | 65 | 195 | 201 | 330 | 134,00 | 1 | 7,43 | 3 | 1,99 | 0 | 12,4 | 15,88 | 10,9 | 7,93 | 8,50 |
| 27 | C9 | SA234WPB | 75,0 | 7,5 | 250 | 273 | 50 | 40 | 205 | 65 | 195 | 201 | 330 | 134,00 | 1 | 7,43 | 3 | 1,78 | 0 | 12,2 | 14,27 | 9,49 | 7,93 | 8,50 |
| 28 | R3 | SA234WPB | 75,0 | 7,5 | 300 | 323,9 | 50 | 40 | 205 | 65 | 195 | 201 | 330 | 134,00 | 1 | 8,82 | 3 | 2,38 | 0 | 14,2 | 19,05 | 13,7 | 9,32 | 9,50 |
| 29 | A35-A36 | SA106-GrA | 75,0 | 7,5 | 300 | 323,9 | 50 | 40 | 205 | 65 | 195 | 201 | 330 | 134,00 | 1 | 8,82 | 3 | 1,99 | 0 | 13,8 | 15,88 | 10,9 | 9,32 | 9,50 |
| 30 | A37-A38 | SA106-GrA | 75,0 | 7,5 | 300 | 323,9 | 50 | 40 | 205 | 65 | 195 | 201 | 330 | 134,00 | 1 | 8,82 | 3 | 2,19 | 0 | 14,0 | 17,48 | 12,3 | 9,32 | 9,50 |
| 31 | A39-A40 | SA106-GrA | 75,0 | 7,5 | 300 | 323,9 | 50 | 40 | 205 | 65 | 195 | 201 | 330 | 134,00 | 1 | 8,82 | 3 | 2,38 | 0 | 14,2 | 19,05 | 13,7 | 9,32 | 9,50 |
| 32 | C10 | SA234WPB | 75,0 | 7,5 | 300 | 323,9 | 50 | 40 | 205 | 65 | 195 | 201 | 330 | 134,00 | 1 | 8,82 | 3 | 2,19 | 0 | 14,0 | 17,48 | 12,3 | 9,32 | 9,50 |
| 33 | A41-A42 | SA106-GrA | 75,0 | 7,5 | 300 | 323,9 | 50 | 40 | 205 | 65 | 195 | 201 | 330 | 134,00 | 1 | 8,82 | 3 | 1,81 | 0 | 13,6 | 14,48 | 9,67 | 9,32 | 9,50 |
| 34 | R4 | SA234WPB | 75,0 | 7,5 | 300 | 323,9 | 50 | 40 | 205 | 65 | 195 | 201 | 330 | 134,00 | 1 | 8,82 | 3 | 2,19 | 0 | 14,0 | 17,48 | 12,3 | 9,32 | 9,50 |
| 35 | A43-A44 | SA106-GrA | 75,0 | 7,5 | 250 | 273 | 50 | 40 | 205 | 65 | 195 | 201 | 330 | 134,00 | 1 | 7,43 | 3 | 1,78 | 0 | 12,2 | 14,27 | 9,49 | 7,93 | 8,50 |
| 36 | C11 | SA234WPB | 75,0 | 7,5 | 250 | 273 | 50 | 40 | 205 | 65 | 195 | 201 | 330 | 134,00 | 1 | 7,43 | 3 | 1,78 | 0 | 12,2 | 14,27 | 9,49 | 7,93 | 8,50 |
| 37 | A45-A46 | SA106-GrA | 75,0 | 7,5 | 250 | 273 | 50 | 40 | 205 | 65 | 195 | 201 | 330 | 134,00 | 1 | 7,43 | 3 | 1,78 | 0 | 12,2 | 14,27 | 9,49 | 7,93 | 8,50 |
| 38 | C12 | SA234WPB | 75,0 | 7,5 | 250 | 273 | 50 | 40 | 205 | 65 | 195 | 201 | 330 | 134,00 | 1 | 7,43 | 3 | 1,78 | 0 | 12,2 | 14,27 | 9,49 | 7,93 | 8,50 |
| 39 | A47-A48-A49 | SA106-GrA | 75,0 | 7,5 | 250 | 273 | 50 | 40 | 205 | 65 | 195 | 201 | 330 | 134,00 | 1 | 7,43 | 3 | 1,99 | 0 | 12,4 | 15,88 | 10,9 | 7,93 | 8,50 |
| 40 | C13 | SA106-GrA | 75,0 | 7,5 | 250 | 273 | 50 | 40 | 205 | 65 | 195 | 201 | 330 | 134,00 | 1 | 7,43 | 3 | 1,78 | 0 | 12,2 | 14,27 | 9,49 | 7,93 | 8,50 |

CALCULUL PRESIUNII DE INCERCARE

| Nr. crt | SIMBOL | PSXDN | FLUID PROBA | $f_{test}$ [N/mm²] | $R_{eH}'$ [N/mm²] | $0,95 \cdot R_{eH}'$ [N/mm²] | $P_{testA}$ [bar] | $P_{testB}$ [bar] | $P_{test\,MAX}$ [bar] | $P_{ph}$ [bar] |
|---|---|---|---|---|---|---|---|---|---|---|
| 1 | C1 | 18750 | Apa | 136,667 | 205 | 194,750 | 95,616 | 107,250 | 107,250 | 107,5 |
| 2 | A1-A2 | 18750 | Apa | 136,667 | 205 | 194,750 | 95,616 | 107,250 | 107,250 | 107,5 |
| 3 | C2 | 18750 | Apa | 136,667 | 205 | 194,750 | 95,616 | 107,250 | 107,250 | 107,5 |
| 4 | A3-A4-A5 | 18750 | Apa | 136,667 | 205 | 194,750 | 95,616 | 107,250 | 107,250 | 107,5 |
| 5 | A6-A7 | 18750 | Apa | 136,667 | 205 | 194,750 | 95,616 | 107,250 | 107,250 | 107,5 |
| 6 | C3 | 18750 | Apa | 136,667 | 205 | 194,750 | 95,616 | 107,250 | 107,250 | 107,5 |
| 7 | T1 | 18750 | Apa | 136,667 | 205 | 194,750 | 95,616 | 107,250 | 107,250 | 107,5 |
| 8 | A8-A9-A10-A11 | 18750 | Apa | 136,667 | 205 | 194,750 | 95,616 | 107,250 | 107,250 | 107,5 |
| 9 | A12-A13 | 11250 | Apa | 136,667 | 205 | 194,750 | 95,616 | 107,250 | 107,250 | 107,5 |
| 10 | C4 | 11250 | Apa | 136,667 | 205 | 194,750 | 95,616 | 107,250 | 107,250 | 107,5 |
| 11 | A14-A15 | 11250 | Apa | 136,667 | 205 | 194,750 | 95,616 | 107,250 | 107,250 | 107,5 |
| 12 | A16-A17 | 11250 | Apa | 136,667 | 205 | 194,750 | 95,616 | 107,250 | 107,250 | 107,5 |
| 13 | C5 | 11250 | Apa | 136,667 | 205 | 194,750 | 95,616 | 107,250 | 107,250 | 107,5 |
| 14 | A18-A19 | 11250 | Apa | 136,667 | 205 | 194,750 | 95,616 | 107,250 | 107,250 | 107,5 |
| 15 | A20-A21 | 18750 | Apa | 136,667 | 205 | 194,750 | 95,616 | 107,250 | 107,250 | 107,5 |
| 16 | A22-A23 | 18750 | Apa | 136,667 | 205 | 194,750 | 95,616 | 107,250 | 107,250 | 107,5 |
| 17 | C6 | 18750 | Apa | 136,667 | 205 | 194,750 | 95,616 | 107,250 | 107,250 | 107,5 |
| 18 | R1 | 22500 | Apa | 136,667 | 205 | 194,750 | 95,616 | 107,250 | 107,250 | 107,5 |
| 19 | A24-A25-A26 | 22500 | Apa | 136,667 | 205 | 194,750 | 95,616 | 107,250 | 107,250 | 107,5 |
| 20 | A27-A28 | 22500 | Apa | 136,667 | 205 | 194,750 | 95,616 | 107,250 | 107,250 | 107,5 |
| 21 | R2 | 22500 | Apa | 136,667 | 205 | 194,750 | 95,616 | 107,250 | 107,250 | 107,5 |
| 22 | A29-A30 | 18750 | Apa | 136,667 | 205 | 194,750 | 95,616 | 107,250 | 107,250 | 107,5 |
| 23 | C7 | 18750 | Apa | 136,667 | 205 | 194,750 | 95,616 | 107,250 | 107,250 | 107,5 |
| 24 | A31-A32 | 18750 | Apa | 136,667 | 205 | 194,750 | 95,616 | 107,250 | 107,250 | 107,5 |
| 25 | C8 | 18750 | Apa | 136,667 | 205 | 194,750 | 95,616 | 107,250 | 107,250 | 107,5 |
| 26 | A33-A34 | 18750 | Apa | 136,667 | 205 | 194,750 | 95,616 | 107,250 | 107,250 | 107,5 |
| 27 | C9 | 18750 | Apa | 136,667 | 205 | 194,750 | 95,616 | 107,250 | 107,250 | 107,5 |
| 28 | R3 | 22500 | Apa | 136,667 | 205 | 194,750 | 95,616 | 107,250 | 107,250 | 107,5 |
| 29 | A35-A36 | 22500 | Apa | 136,667 | 205 | 194,750 | 95,616 | 107,250 | 107,250 | 107,5 |
| 30 | A37-A38 | 22500 | Apa | 136,667 | 205 | 194,750 | 95,616 | 107,250 | 107,250 | 107,5 |
| 31 | A39-A40 | 22500 | Apa | 136,667 | 205 | 194,750 | 95,616 | 107,250 | 107,250 | 107,5 |
| 32 | C10 | 22500 | Apa | 136,667 | 205 | 194,750 | 95,616 | 107,250 | 107,250 | 107,5 |
| 33 | A41-A42 | 22500 | Apa | 136,667 | 205 | 194,750 | 95,616 | 107,250 | 107,250 | 107,5 |
| 34 | R4 | 22500 | Apa | 136,667 | 205 | 194,750 | 95,616 | 107,250 | 107,250 | 107,5 |
| 35 | A43-A44 | 18750 | Apa | 136,667 | 205 | 194,750 | 95,616 | 107,250 | 107,250 | 107,5 |
| 36 | C11 | 18750 | Apa | 136,667 | 205 | 194,750 | 95,616 | 107,250 | 107,250 | 107,5 |
| 37 | A45-A46 | 18750 | Apa | 136,667 | 205 | 194,750 | 95,616 | 107,250 | 107,250 | 107,5 |
| 38 | C12 | 18750 | Apa | 136,667 | 205 | 194,750 | 95,616 | 107,250 | 107,250 | 107,5 |
| 39 | A47-A48-A49 | 18750 | Apa | 136,667 | 205 | 194,750 | 95,616 | 107,250 | 107,250 | 107,5 |
| 40 | C13 | 18750 | [illegible] | [illegible] | [illegible] | [illegible] | [illegible] | [illegible] | [illegible] | [illegible] |

CALCULUL DE VERIFICARE A TENSIUNII EFECTIVE IN PROBA / CALCULUL DURATEI REMANENTE DE VIATA

| Nr. crt | SIMBOL | $P_{test}$ ADOPTAT [N/mm²] | $p_{test}$ ADOPTAT [N/mm²] | $e_p$ [mm] | $f'_{test}$ [N/mm²] | $f'_{test} \leq 0,95 Re_t'$ | Gros. min. masurata, S0 [mm] | Durata de functionare, t [ani] | Vit. de coroz. calc. Vm [mm/an] | | Durata reman. de viata [ani] | $P_{max}$ |
|---|---|---|---|---|---|---|---|---|---|---|---|---|
| 1 | C1 | 107,5 | 10,75 | 8,11 | 175,50 | cond. verific. | 10,5 | 41 | 0,05 | 0,15 | [redacted] | 8,6125 |
| 2 | A1-A2 | 107,5 | 10,75 | 8,50 | 167,26 | cond. verific. | 15,1 | 41 | 0,02 | 0,15 | 29,3 | 8,6125 |
| 3 | C2 | 107,5 | 10,75 | 8,11 | 175,50 | cond. verific. | 10,7 | 41 | 0,06 | 0,15 | 9,8 | 8,6125 |
| 4 | A3-A4-A5 | 107,5 | 10,75 | 8,11 | 175,50 | cond. verific. | 12,6 | 41 | 0,00 | 0,15 | 18,2 | 8,6125 |
| 5 | A6-A7 | 107,5 | 10,75 | 8,11 | 175,50 | cond. verific. | 12,6 | 41 | 0,00 | 0,15 | 18,2 | 8,6125 |
| 6 | C3 | 107,5 | 10,75 | 8,11 | 175,50 | cond. verific. | 10,5 | 41 | 0,05 | 0,15 | 8,9 | 8,6125 |
| 7 | T1 | 107,5 | 10,75 | 8,11 | 175,50 | cond. verific. | 10,2 | 41 | 0,06 | 0,15 | [redacted] | 8,6125 |
| 8 | A8-A9-A10-A11 | 107,5 | 10,75 | 8,50 | 167,26 | cond. verific. | 13,0 | 41 | 0,03 | 0,15 | 20,0 | 8,6125 |
| 9 | A12-A13 | 107,5 | 10,75 | 5,50 | 159,10 | cond. verific. | 15,0 | 41 | 0,02 | 0,15 | 42,2 | 9,0541 |
| 10 | C4 | 107,5 | 10,75 | 5,50 | 159,10 | cond. verific. | 14,4 | 41 | 0,04 | 0,15 | 39,6 | 9,0541 |
| 11 | A14-A15 | 107,5 | 10,75 | 5,50 | 159,10 | cond. verific. | 15,0 | 41 | 0,02 | 0,15 | 42,2 | 9,0541 |
| 12 | A16-A17 | 107,5 | 10,75 | 5,50 | 159,10 | cond. verific. | 10,3 | 41 | 0,02 | 0,15 | 21,3 | 9,0541 |
| 13 | C5 | 107,5 | 10,75 | 5,50 | 159,10 | cond. verific. | 10,7 | 41 | 0,01 | 0,15 | 23,1 | 9,0541 |
| 14 | A18-A19 | 107,5 | 10,75 | 5,50 | 159,10 | cond. verific. | 10,8 | 41 | 0,01 | 0,15 | 22,7 | 9,0541 |
| 15 | A20-A21 | 107,5 | 10,75 | 8,11 | 175,50 | cond. verific. | 12,0 | 41 | 0,02 | 0,15 | 15,6 | 8,6125 |
| 16 | A22-A23 | 107,5 | 10,75 | 8,11 | 175,50 | cond. verific. | 12,1 | 41 | 0,01 | 0,15 | 16,0 | 8,6125 |
| 17 | C6 | 107,5 | 10,75 | 8,50 | 167,26 | cond. verific. | 15,1 | 41 | 0,02 | 0,15 | 29,3 | 8,6125 |
| 18 | R1 | 107,5 | 10,75 | 9,50 | 177,88 | cond. verific. | 16,5 | 41 | 0,02 | 0,15 | 31,1 | 8,098 |
| 19 | A24-A25-A26 | 107,5 | 10,75 | 9,50 | 177,88 | cond. verific. | 15,6 | 41 | 0,01 | 0,15 | 27,1 | 8,098 |
| 20 | A27-A28 | 107,5 | 10,75 | 9,50 | 177,88 | cond. verific. | 17,2 | 41 | 0,01 | 0,15 | 34,2 | 8,098 |
| 21 | R2 | 107,5 | 10,75 | 9,50 | 177,88 | cond. verific. | 17,4 | 41 | 0,04 | 0,15 | 35,1 | 8,098 |
| 22 | A29-A30 | 107,5 | 10,75 | 8,50 | 167,26 | cond. verific. | 15,1 | 41 | 0,02 | 0,15 | 29,3 | 8,6125 |
| 23 | C7 | 107,5 | 10,75 | 8,50 | 167,26 | cond. verific. | 15,1 | 41 | 0,02 | 0,15 | 29,3 | 8,6125 |
| 24 | A31-A32 | 107,5 | 10,75 | 8,50 | 167,26 | cond. verific. | 15,6 | 41 | 0,01 | 0,15 | 31,6 | 8,6125 |
| 25 | C8 | 107,5 | 10,75 | 8,50 | 167,26 | cond. verific. | 15,1 | 41 | 0,02 | 0,15 | 29,3 | 8,6125 |
| 26 | A33-A34 | 107,5 | 10,75 | 8,50 | 167,26 | cond. verific. | 15,6 | 41 | 0,01 | 0,15 | 31,6 | 8,6125 |
| 27 | C9 | 107,5 | 10,75 | 8,50 | 167,26 | cond. verific. | 14,1 | 41 | 0,00 | 0,15 | 24,9 | 8,6125 |
| 28 | R3 | 107,5 | 10,75 | 9,50 | 177,88 | cond. verific. | 17,8 | 41 | 0,03 | 0,15 | 36,9 | 8,098 |
| 29 | A35-A36 | 107,5 | 10,75 | 9,50 | 177,88 | cond. verific. | 14,3 | 41 | 0,04 | 0,15 | 21,3 | 8,098 |
| 30 | A37-A38 | 107,5 | 10,75 | 9,50 | 177,88 | cond. verific. | 16,5 | 41 | 0,02 | 0,15 | 31,1 | 8,098 |
| 31 | A39-A40 | 107,5 | 10,75 | 9,50 | 177,88 | cond. verific. | 17,8 | 41 | 0,03 | 0,15 | 36,9 | 8,098 |
| 32 | C10 | 107,5 | 10,75 | 9,50 | 177,88 | cond. verific. | 16,4 | 41 | 0,03 | 0,15 | 30,7 | 8,098 |
| 33 | A41-A42 | 107,5 | 10,75 | 9,50 | 177,88 | cond. verific. | 17,0 | 41 | -0,06 | 0,15 | 33,3 | 8,098 |
| 34 | R4 | 107,5 | 10,75 | 9,50 | 177,88 | cond. verific. | 17,2 | 41 | 0,01 | 0,15 | 34,2 | 8,098 |
| 35 | A43-A44 | 107,5 | 10,75 | 8,50 | 167,26 | cond. verific. | 14,0 | 41 | 0,01 | 0,15 | 24,4 | 8,6125 |
| 36 | C11 | 107,5 | 10,75 | 8,50 | 167,26 | cond. verific. | 13,0 | 41 | 0,03 | 0,15 | 20,0 | 8,6125 |
| 37 | A45-A46 | 107,5 | 10,75 | 8,50 | 167,26 | cond. verific. | 14,0 | 41 | 0,01 | 0,15 | 24,4 | 8,6125 |
| 38 | C12 | 107,5 | 10,75 | 8,50 | 167,26 | cond. verific. | 13,5 | 41 | 0,02 | 0,15 | 22,2 | [illegible] |
| 39 | A47-A48-A49 | 107,5 | 10,75 | 8,50 | 167,26 | cond. verific. | 15,0 | 41 | 0,02 | 0,15 | 26,9 | [illegible] |

| COMANDA | | catiel | 1975 | NR. | | ANEXA III | |
|---|---|---|---|---|---|---|---|
| BENEFICIAR | S.C. PETROTEL-LUKOIL S.A. | | | PAG | | DIN | |
| INSTALATIA | HPM | | | REV | DATA | INTOCMIT | VERIFICAT / APROBAT |
| | | | | 0 | 09.2016 | Cretu G. | Balind I. / Ninca N. |
| | | | | 1 | | | |
| | | | | 2 | | | |

LUKOIL OIL COMPANY — TUV AUSTRIA ROMANIA — SIS — REVIAR DE CALCU -06-PGH-016; 030, 072-300

CARACTERISTICI TEHNICE CONDUCTE / CALCULUL DE DIMENSIONARE LA PRESIUNEA INTERIOARA

| Nr. crt | Caracteristici | $p_c$ [N/mm²] | | $R_{p0,2t}$ [N/mm²] | | f [N/mm²] | z | e [mm] | $c_0$ [mm] | $c_1$ [mm] | $c_2$ [mm] | $e_c$ [mm] | | $e_o$ [mm] | e* [mm] | |
|---|---|---|---|---|---|---|---|---|---|---|---|---|---|---|---|---|
| 41 | [illegible] | 7,5 | [illegible] | 201 | [illegible] | 134,00 | 1 | 7,43 | 3 | 1,89 | 0 | 12,3 | [illegible] | 10,2 | 7,93 | [illegible] |
| 42 | [illegible] | 7,5 | [illegible] | 201 | [illegible] | 134,00 | 1 | 7,43 | 3 | 1,78 | 0 | 12,2 | [illegible] | 9,49 | 7,93 | [illegible] |
| 43 | [illegible] | 7,5 | [illegible] | 201 | [illegible] | 134,00 | 1 | 7,43 | 3 | 1,99 | 0 | 12,4 | [illegible] | 10,9 | 7,93 | [illegible] |
| 44 | [illegible] | 7,5 | [illegible] | 201 | [illegible] | 134,00 | 1 | 7,43 | 3 | 1,78 | 0 | 12,2 | [illegible] | 9,49 | 7,93 | [illegible] |
| 45 | [illegible] | 7,5 | [illegible] | 201 | [illegible] | 134,00 | 1 | 7,43 | 3 | 1,89 | 0 | 12,3 | [illegible] | 10,2 | 7,93 | [illegible] |
| 46 | [illegible] | 7,5 | [illegible] | 201 | [illegible] | 134,00 | 1 | 7,43 | 3 | 1,59 | 0 | 12,0 | [illegible] | 8,11 | 7,93 | [illegible] |
| 47 | [illegible] | 7,5 | [illegible] | 201 | [illegible] | 134,00 | 1 | 7,43 | 3 | 1,89 | 0 | 12,3 | [illegible] | 10,2 | 7,93 | [illegible] |
| 48 | [illegible] | 7,5 | [illegible] | 201 | [illegible] | 134,00 | 1 | 7,43 | 3 | 1,89 | 0 | 12,3 | [illegible] | 10,2 | 7,93 | [illegible] |
| 49 | [illegible] | 7,5 | [illegible] | 201 | [illegible] | 134,00 | 1 | 0,73 | 3 | 0,7 | 0 | 4,4 | [illegible] | 1,87 | 1,23 | [illegible] |
| 50 | [illegible] | 7,5 | [illegible] | 201 | [illegible] | 134,00 | 1 | 0,73 | 3 | 0,7 | 0 | 4,4 | [illegible] | 1,87 | 1,23 | [illegible] |
| 51 | [illegible] | 7,5 | [illegible] | 201 | [illegible] | 134,00 | 1 | 0,73 | 3 | 0,7 | 0 | 4,4 | [illegible] | 1,87 | 1,23 | [illegible] |
| 52 | [illegible] | 7,5 | [illegible] | 201 | [illegible] | 134,00 | 1 | 0,73 | 3 | 0,7 | 0 | 4,4 | [illegible] | 1,87 | 1,23 | [illegible] |
| 53 | [illegible] | 7,5 | [illegible] | 201 | [illegible] | 134,00 | 1 | 0,73 | 3 | 0,7 | 0 | 4,4 | [illegible] | 1,87 | 1,23 | [illegible] |
| 54 | [illegible] | 7,5 | [illegible] | 201 | [illegible] | 134,00 | 1 | 1,64 | 3 | 0,69 | 0 | 5,3 | [illegible] | 1,85 | 2,14 | [illegible] |
| 55 | [illegible] | 7,5 | [illegible] | 201 | [illegible] | 134,00 | 1 | 1,64 | 3 | 1,09 | 0 | 5,7 | [illegible] | 4,65 | 2,14 | [illegible] |
| 56 | [illegible] | 7,5 | [illegible] | 201 | [illegible] | 134,00 | 1 | 1,64 | 3 | 0,79 | 0 | 5,4 | [illegible] | 2,56 | 2,14 | [illegible] |
| 57 | [illegible] | 7,5 | [illegible] | 201 | [illegible] | 134,00 | 1 | 1,64 | 3 | 0,69 | 0 | 5,3 | [illegible] | 1,85 | 2,14 | [illegible] |
| 58 | [illegible] | 7,5 | [illegible] | 201 | [illegible] | 134,00 | 1 | 1,64 | 3 | 0,69 | 0 | 5,3 | [illegible] | 1,85 | 2,14 | [illegible] |
| 59 | [illegible] | 7,5 | [illegible] | 201 | [illegible] | 134,00 | 1 | 1,64 | 3 | 0,79 | 0 | 5,4 | [illegible] | 2,56 | 2,14 | [illegible] |
| 60 | [illegible] | 7,5 | [illegible] | 201 | [illegible] | 134,00 | 1 | 1,64 | 3 | 0,69 | 0 | 5,3 | [illegible] | 1,85 | 2,14 | [illegible] |
| 61 | [illegible] | 7,5 | [illegible] | 201 | [illegible] | 134,00 | 1 | 0,73 | 3 | 0,7 | 0 | 4,4 | [illegible] | 1,87 | 1,23 | [illegible] |
| 62 | [illegible] | 7,5 | [illegible] | 201 | [illegible] | 134,00 | 1 | 0,73 | 3 | 0,7 | 0 | 4,4 | [illegible] | 1,87 | 1,23 | [illegible] |
| 63 | [illegible] | 7,5 | [illegible] | 201 | [illegible] | 134,00 | 1 | 1,64 | 3 | 1,09 | 0 | 5,7 | [illegible] | 4,65 | 2,14 | [illegible] |
| 64 | [illegible] | 7,5 | [illegible] | 201 | [illegible] | 134,00 | 1 | 0,58 | 3 | 0,6 | 0 | 4,2 | [illegible] | 1,18 | 1,06 | [illegible] |

CALCULUL PRESIUNII DE INCERCARE

| Nr. crt | PSXON | FLUID PROBA | $f_{test}$ [N/mm²] | | $0,95 \cdot Re_t$ [N/mm²] | $P_{test,A}$ [bar] | $P_{test,B}$ [bar] | $P_{test\,max}$ [bar] | $P_{ph}$ [bar] |
|---|---|---|---|---|---|---|---|---|---|
| 41 | 18750 | Apa | 136,667 | [illegible] | 194,750 | 95,616 | 107,250 | 107,250 | 107,5 |
| 42 | 18750 | Apa | 136,667 | [illegible] | 194,750 | 95,616 | 107,250 | 107,250 | 107,5 |
| 43 | 18750 | Apa | 136,667 | [illegible] | 194,750 | 95,616 | 107,250 | 107,250 | 107,5 |
| 44 | 18750 | Apa | 136,667 | [illegible] | 194,750 | 95,616 | 107,250 | 107,250 | 107,5 |
| 45 | 18750 | Apa | 136,667 | [illegible] | 194,750 | 95,616 | 107,250 | 107,250 | 107,5 |
| 46 | 18750 | Apa | 136,667 | [illegible] | 194,750 | 95,616 | 107,250 | 107,250 | 107,5 |
| 47 | 18750 | Apa | 136,667 | [illegible] | 194,750 | 95,616 | 107,250 | 107,250 | 107,5 |
| 48 | 18750 | Apa | 136,667 | [illegible] | 194,750 | 95,616 | 107,250 | 107,250 | 107,5 |
| 49 | 1500 | Apa | 136,667 | [illegible] | 194,750 | 95,616 | 107,250 | 107,250 | 107,5 |
| 50 | 1500 | Apa | 136,667 | [illegible] | 194,750 | 95,616 | 107,250 | 107,250 | 107,5 |
| 51 | 1500 | Apa | 136,667 | [illegible] | 194,750 | 95,616 | 107,250 | 107,250 | 107,5 |
| 52 | 1500 | Apa | 136,667 | [illegible] | 194,750 | 95,616 | 107,250 | 107,250 | 107,5 |
| 53 | 1500 | Apa | 136,667 | [illegible] | 194,750 | 95,616 | 107,250 | 107,250 | 107,5 |
| 54 | 3750 | Apa | 136,667 | [illegible] | 194,750 | 95,616 | 107,250 | 107,250 | 107,5 |
| 55 | 3750 | Apa | 136,667 | [illegible] | 194,750 | 95,616 | 107,250 | 107,250 | 107,5 |
| 56 | 3750 | Apa | 136,667 | [illegible] | 194,750 | 95,616 | 107,250 | 107,250 | 107,5 |
| 57 | 3750 | Apa | 136,667 | [illegible] | 194,750 | 95,616 | 107,250 | 107,250 | 107,5 |
| 58 | 3750 | Apa | 136,667 | [illegible] | 194,750 | 95,616 | 107,250 | 107,250 | 107,5 |
| 59 | 3750 | Apa | 136,667 | [illegible] | 194,750 | 95,616 | 107,250 | 107,250 | 107,5 |
| 60 | 3750 | Apa | 136,667 | [illegible] | 194,750 | 95,616 | 107,250 | 107,250 | 107,5 |
| 61 | 1500 | Apa | 136,667 | [illegible] | 194,750 | 95,616 | 107,250 | 107,250 | 107,5 |
| 62 | 1500 | Apa | 136,667 | [illegible] | 194,750 | 95,616 | 107,250 | 107,250 | 107,5 |
| 63 | 3750 | Apa | 136,667 | [illegible] | 194,750 | 95,616 | 107,250 | 107,250 | 107,5 |
| 64 | 1125 | Apa | 136,667 | [illegible] | 194,750 | 95,616 | 107,250 | 107,250 | 107,5 |

CALCULUL DE VERIFICARE A TENSIUNII EFECTIVE IN PROBA / CALCULUL DURATEI REMANENTE DE VIATA

| Nr. crt | $R_{test}$ ADOPTAT [N/mm²] | $P_{test}$ ADOPTAT [N/mm²] | $e_p$ [mm] | $f_{test}$ [N/mm²] | $f_{test} \leq 0,95 Re_t$ | Gros. min. masurata [mm] | Durata de functionare, t [ani] | Vit. de coroz. calc. Vm [mm/an] | | Durata reman. de viata [ani] | $P_{max}$ |
|---|---|---|---|---|---|---|---|---|---|---|---|
| 41 | 107,5 | 10,75 | 8,50 | 167,26 | cond. verific. | [illegible] | 41 | 0,00 | 0,15 | 28,4 | 8,6125 |
| 42 | 107,5 | 10,75 | 8,50 | 167,26 | cond. verific. | [illegible] | 41 | 0,02 | 0,15 | 22,2 | 8,6125 |
| 43 | 107,5 | 10,75 | 8,50 | 167,26 | cond. verific. | [illegible] | 41 | 0,01 | 0,15 | 31,6 | 8,6125 |
| 44 | 107,5 | 10,75 | 8,50 | 167,26 | cond. verific. | [illegible] | 41 | 0,03 | 0,15 | 20,0 | 8,6125 |
| 45 | 107,5 | 10,75 | 8,50 | 167,26 | cond. verific. | [illegible] | 41 | 0,01 | 0,15 | 27,1 | 8,6125 |
| 46 | 107,5 | 10,75 | 8,41 | 175,50 | cond. verific. | [illegible] | 41 | 0,02 | 0,15 | 15,6 | 8,6125 |
| 47 | 107,5 | 10,75 | 8,50 | 167,26 | cond. verific. | [illegible] | 41 | 0,00 | 0,15 | 28,9 | 8,6125 |
| 48 | 107,5 | 10,75 | 8,50 | 167,26 | cond. verific. | [illegible] | 41 | 0,00 | 0,15 | 28,9 | 8,6125 |
| 49 | 107,5 | 10,75 | 1,87 | 72,15 | cond. verific. | [illegible] | 41 | 0,05 | 0,15 | [illegible] | 27,459 |
| 50 | 107,5 | 10,75 | 1,87 | 72,15 | cond. verific. | [illegible] | 41 | 0,04 | 0,15 | [illegible] | 27,459 |
| 51 | 107,5 | 10,75 | 1,87 | 72,15 | cond. verific. | [illegible] | 41 | 0,04 | 0,15 | [illegible] | 27,459 |
| 52 | 107,5 | 10,75 | 1,87 | 72,15 | cond. verific. | [illegible] | 41 | 0,05 | 0,15 | [illegible] | 27,459 |
| 53 | 107,5 | 10,75 | 1,87 | 72,15 | cond. verific. | [illegible] | 41 | 0,05 | 0,15 | [illegible] | 27,459 |
| 54 | 107,5 | 10,75 | [illegible] | 170,05 | cond. verific. | [illegible] | 41 | 0,01 | 0,15 | 12,0 | 11,592 |
| 55 | 107,5 | 10,75 | [illegible] | [illegible] | cond. verific. | [illegible] | 41 | 0,02 | 0,15 | 24,9 | 11,592 |
| 56 | 107,5 | 10,75 | [illegible] | [illegible] | cond. verific. | [illegible] | 41 | 0,06 | 0,15 | [illegible] | 11,592 |
| 57 | 107,5 | 10,75 | [illegible] | [illegible] | cond. verific. | [illegible] | 41 | 0,01 | 0,15 | 12,0 | 11,592 |
| 58 | 107,5 | 10,75 | [illegible] | [illegible] | cond. verific. | [illegible] | 41 | 0,00 | 0,15 | 12,9 | 11,592 |
| 59 | 107,5 | 10,75 | [illegible] | [illegible] | cond. verific. | [illegible] | 41 | 0,05 | 0,15 | 8,9 | 11,592 |
| 60 | 107,5 | 10,75 | [illegible] | [illegible] | cond. verific. | [illegible] | 41 | 0,01 | 0,15 | 11,6 | 11,592 |
| 61 | 107,5 | 10,75 | 1,87 | 72,15 | cond. verific. | [illegible] | 41 | 0,05 | 0,15 | [illegible] | 27,459 |
| 62 | 107,5 | 10,75 | 1,87 | 72,15 | cond. verific. | [illegible] | 41 | 0,05 | 0,15 | [illegible] | 27,459 |
| 63 | 107,5 | 10,75 | [illegible] | 124,27 | cond. verific. | [illegible] | 41 | 0,01 | 0,15 | 25,8 | 11,592 |
| 64 | 107,5 | 10,75 | [illegible] | 91,44 | cond. verific. | [illegible] | 41 | 0,03 | 0,15 | [illegible] | 27,772 |
| | | | | | | | Vit. de coroz. adopt. Vm | | Durata remanenta de viata | | |
| | | | | | | [illegible] | 0,15 | | 8,0 | | |

Se poate adopta durata de viata 8 ani, cu conditia inlocuirii urmatoarelor elemente de conducta: A72-A73 dupa 4 ani, A64-A65, A66-A67, A68-A69, A70-A71, A82-A83, A84-A85 dupa 5 ani, C17 dupa 6 ani, T1, A88-A89 dupa 7 ani.

**LEGENDA**

$p_c$ – presiunea de calcul, N/mm²
Do – diametrul exterior al țevii, mm
Di – diametrul interior al țevii, mm
f – rezistența admisibilă, N/mm2
ReH – limita de curgere superioară la temperatura de calcul, N/mm2
Rp0,2 – limita de curgere convențională la temperatura de calcul, N/mm2
Rm – rezistența de rupere la tracțiune la temperatura de 20°C, N/mm2
z – factorul de calitate al îmbinărilor sudate (z=0.85-1)
c0 – adaos pentru condiții de exploatare (coroziune, eroziune), mm
c1 – adaos pentru abaterea negativă la grosime, mm
c2 – adaos pentru prelucrări mecanice, mm
ε – rotunjire rezultată din alegerea grosimii adoptate (ecrd), mm
PS = pc – presiunea de calcul, bar
ftest – efortul unitar admisibil la temperatura la care se face încercarea, N/mm2
f – efortul unitar admisibil la temperatura de calcul (tmax), N/mm2
ptest – presiunea la proba hidraulică, N/mm2
f ef test – tensiune efectiva in proba, N/mm2
es – grosimea de rezistenta la conditiile de proba, mm
$e_{ord}$ – grosimea inițială a elementului (din standard)
e min – grosimi minime pentru țevi care permit realizarea asamblarilor pe conducte

Numele si prenumele: DODON MARIUS
Atestat RADTE IMSP: DISPR/E/8234/03.04.2015
AVIZAT CORESPUNDE: Ok/2010
Data: 10.2016 Semnătura: